Repeater Triode

3A/141A

Replaces 410ID

(3A/141AY is the 3A/141A tested to special limits for replacement purposes only.)

CATHODE.

Oxide-coated filament		
Current	1.0	A
Nominal voltage	4.5	V

RATING.

Amplification factor	Measured at Va 130V	6	
Impedance	Vg_1—9V	6,000	Ω

DIRECT INTER-ELECTRODE CAPACITIES.

Grid to anode	8.1	pF
Grid to filament	6.4	pF
Anode to filament	5.6	pF

DIMENSIONS.

Maximum overall length	118	mm.
Maximum bulb diameter	46	mm.
Base : American medium 4-pin bayonet		
Net weight	60	g.

MAXIMUM RATINGS.

Maximum direct anode voltage	190	V
Maximum direct anode current	12	mA

Repeater Triode

3A/141A

Replaces 4101D

(3A/141AY is the 3A/141A tested to special limits for replacement purposes only.)

TYPICAL OPERATING CONDITIONS.

							*			*	*	*
Anode voltage	volts	100	100	130	130	130	160	160	160	190	190	190
Grid bias	volts	—4	—6	—6	—9	—12	—10	—12	—16	—16	—18	—20
Anode current	mA	7.3	5.5	11.1	7.8	5.0	12.3	10.1	6.3	11	9.0	7.2
Amplification factor		6.1	6.0	6.1	6.0	5.9	6.1	6.0	5.9	6.0	5.9	5.9
Impedance r_a	ohms	5,500	6,200	4,900	5,700	7,000	4,700	5,200	6,600	5,100	5,600	6,300
For load impedance $R=r_a$												
Output	mW	14	26	35	65	90	100	130	175	235	265	285
2nd harmonic	db	33	27	32	26	21	29	25	19	24	21	19
For lead impedance $R=2r_a$												
Output	mW	12	24	30	60	80	90	115	155	210	235	250
2nd harmonics	db	38	32	38	31	26	34	30	25	29	26	24

* Maximum operating conditions.

Repeater Triode

3A/141A

Replaces 4101D

(3A/141AY is the 3A/141A tested to special limits for replacement purposes only.)

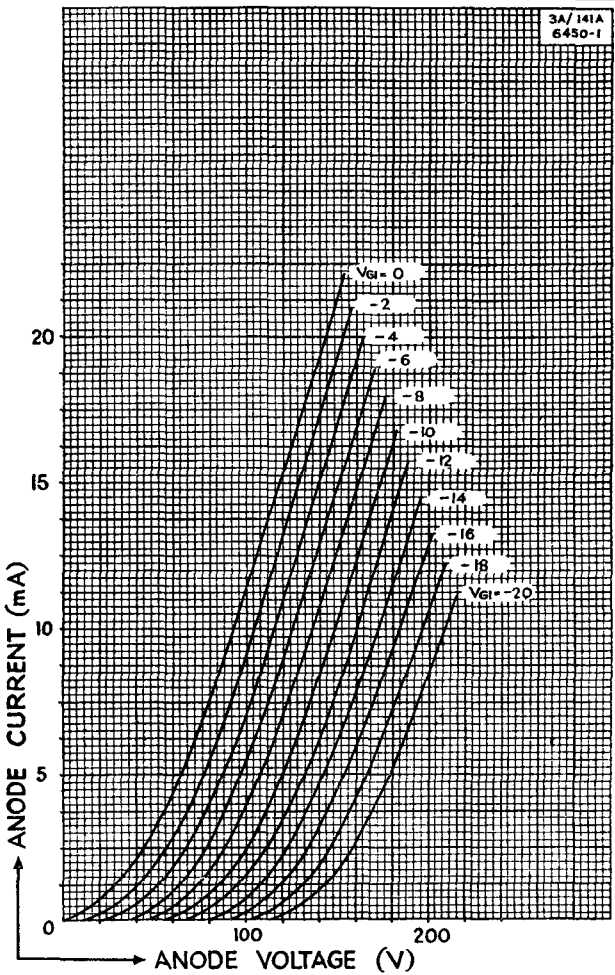

Repeater Triode

3A/141A

Replaces 4101D
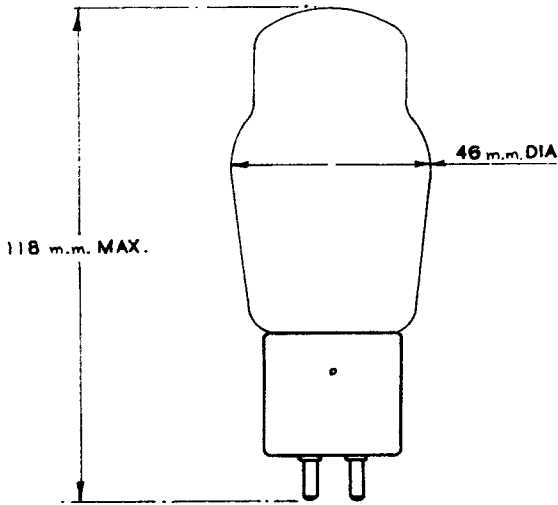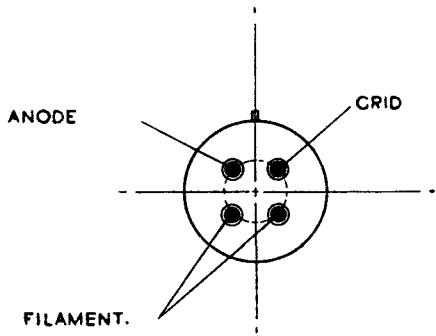
(3A/141AY is the 3A/141A tested to specia limits for replacement purposes only.)