TWIN TRIODE 2C51

396 A

Twin triode with separate cathodes suitable for use in amplifier, mixer, oscillator and multivibrator circuits. Useful frequency range extends from low frequencies to about 800 Mc.

COLD CAPACITANCES (without external shield)

Input, Each Section*	2.2	$\mu\mu$F
Output, Section 1*	1.0	$\mu\mu$F
Output, Section 2*	1.0	$\mu\mu$F
Plate to Grid, Each Section*	1.3	$\mu\mu$F
Plate to Plate, nominal	.05	$\mu\mu$F
Plate to Plate, maximum	.1	$\mu\mu$F

ABSOLUTE MAXIMUM RATINGS (each section)

Plate Voltage	330	volts
Grid Voltage, positive value	+ 5	volts
Grid Voltage, negative value	— 50	volts
Cathode Current	20	ma
Plate Dissipation	1.6	watts
Heater — Cathode Voltage	100	volts
Bulb Temperature, at hottest point	160	°C
Grid Circuit Resistance		
with fixed bias	1	Mohm
with cathode bias	2	Mohms

* Measured with internal shield and heater connected to cathode of section. Elements of other section grounded.

MECHANICAL DATA

Base: Small Button Noval 9-pin, RETMA E9-1
Bulb: EIA T 6½
Mounting Position: Any

PIN NO	CONNECTED TO
1.	Heater
2.	Cathode of Section 1
3.	Grid of Section 1
4.	Plate of Section 1
5.	Shield
6.	Plate of Section 2
7.	Grid of Section 2
8.	Cathode of Section 2
9.	Heater

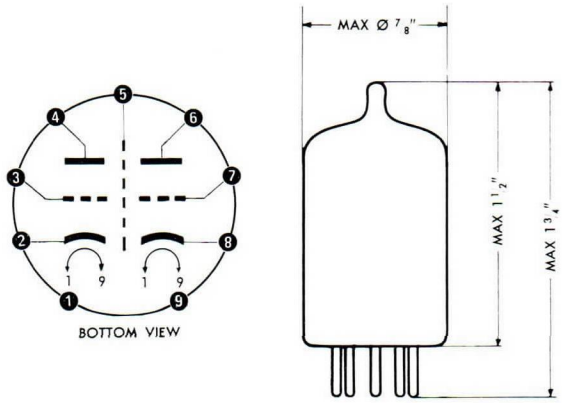

2C51 / 396A TWIN TRIODE

Ericsson LM

TYPICAL OPERATION. CLASS A_1. (each section)

Heater Voltage	6.3	6.3	volts
Heater Current	.3	.3	amp
Plate Supply Voltage	130	150	volts
Cathode Bias Resistor	200	240	ohms
Plate Current	7.6	8.2	ma
Transconductance	5400	5500	μmhos
Amplification Factor	35	35	
Plate Resistance	6500	6400	ohms
Grid Voltage for Plate Current = 10 μa	— 6	— 7	volts
Equivalent Noise Resistance	500	500	ohms
Input Conductance at 100 Mc	130	130	μmhos

TYPICAL OPERATION. CLASS AB_1

Plate Supply Voltage	300	volts
Cathode Bias Resistor	800	ohms
RMS AF Grid to Grid Voltage	14	volts
Zero Signal Plate Current, Each Section	4.9	ma
Max. Signal Plate Current, Each Section	6.3	ma
Load Impedance, Plate to Plate	40,000	ohms
Total Harmonic Distortion	10	%
Max. Signal Power Output	1.0	watt

OPERATION RANGE VALUES (each section)

Heater Voltage		6.3		volts
Plate Supply Voltage		130		volts
Cathode Bias Resistor		200		ohms
	MIN	AVE	MAX	
Heater Current	280	300	320	ma
Plate Current	5.2	7.6	10.0	ma
Transconductance	4200	5400	6600	μmhos
Transconductance, End of Life Point	3600			μmhos
I_{hk} at E_{hk} = ± 100 volts			20	μa
Grid Current			— .05	μa
Cutoff Plate Current at E_{c1} = — 10 volts			75	μa
Vibration Output Measured at 2.5 g and 25 cps with both sections in parallel E_f = 6.3 v, E_b = 150 v, E_{c1} = — 3 v, r_p = 2000 ohms.		5		mv

AVERAGE CHARACTERISTICS

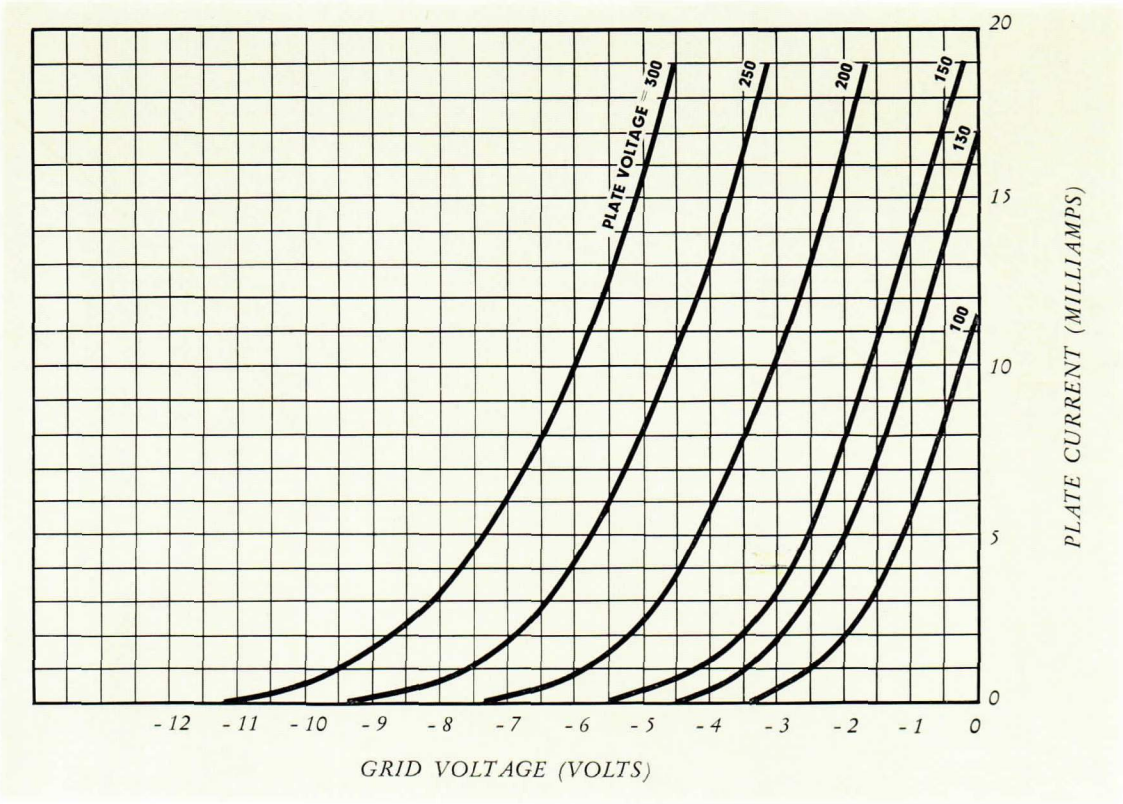

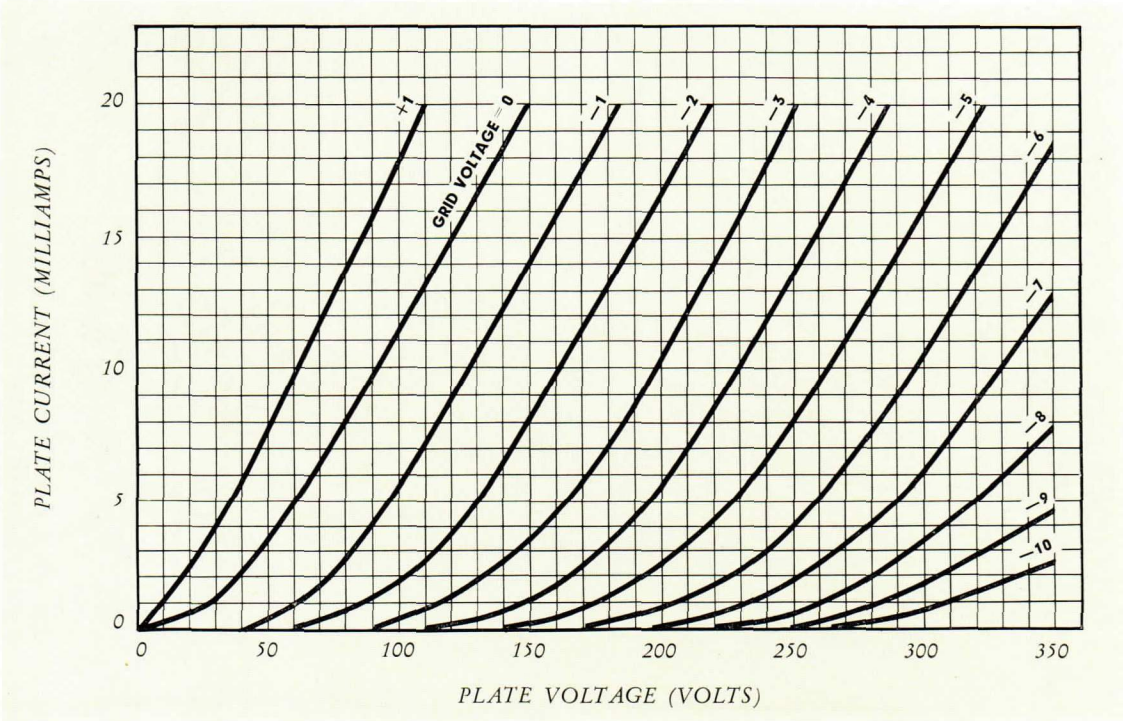

2C51 TWIN TRIODE

396 A
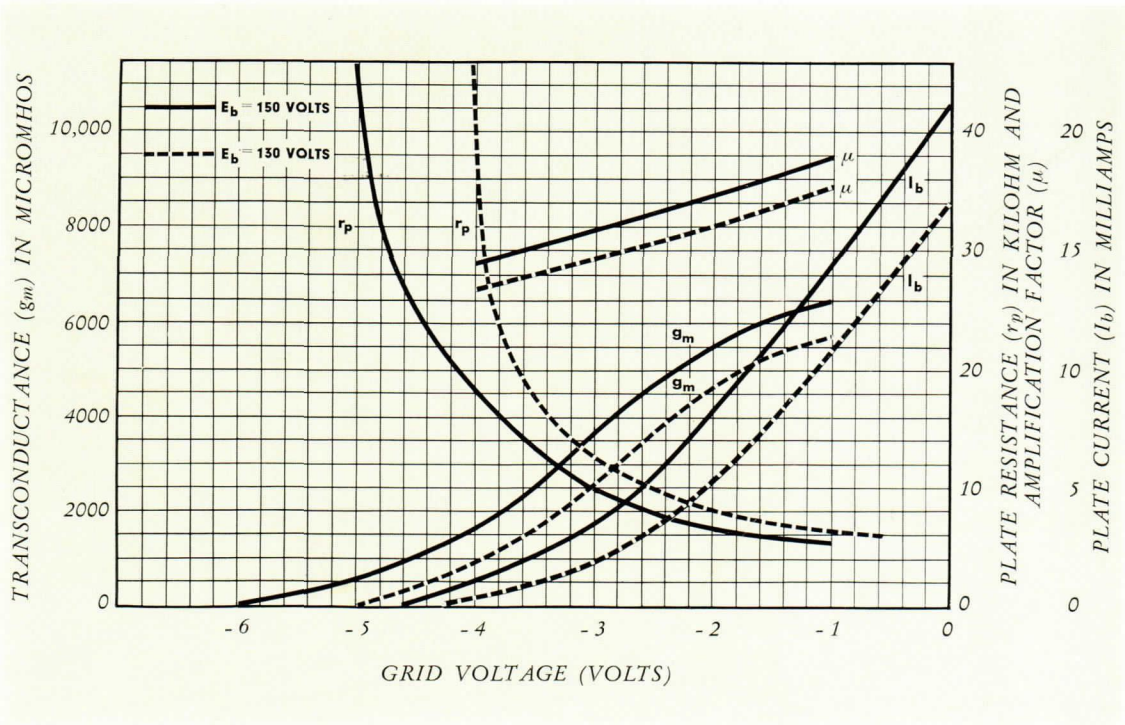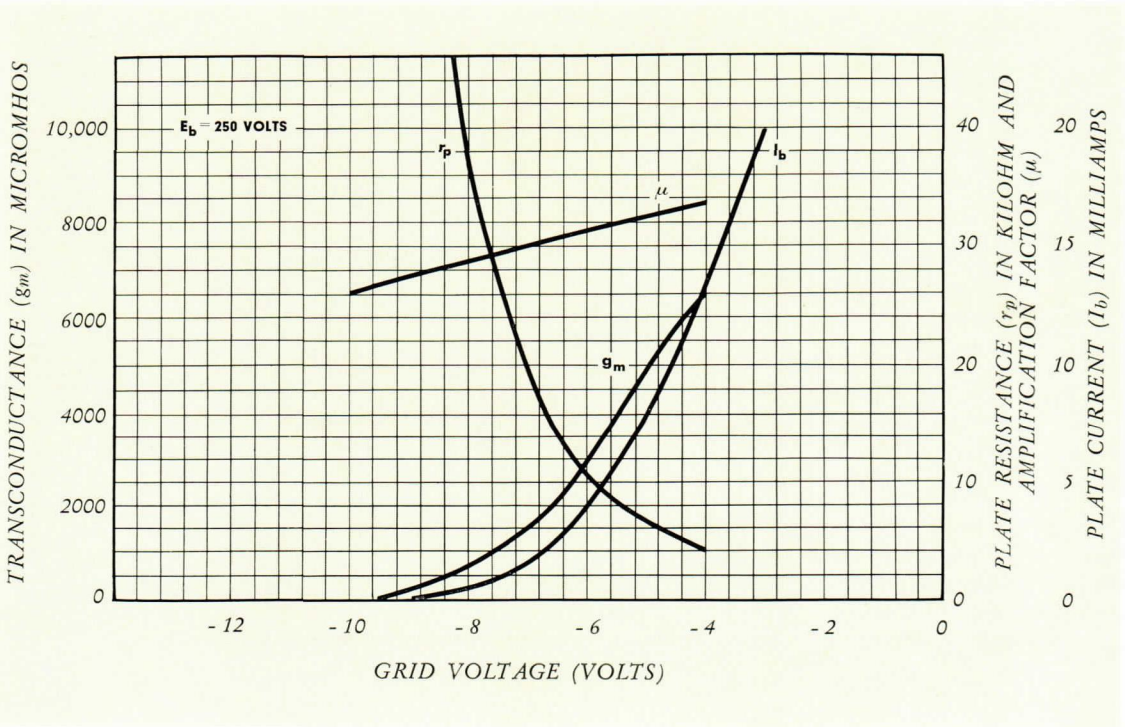
AVERAGE CHARACTERISTICS