TECHNICAL DATA

3-500Z

HIGH-MU
POWER TRIODE

The EIMAC 3-500Z is a compact power triode intended to be used as a zero-bias Class-AB2 amplifier in audio or radio-frequency applications. Operation with zero grid bias simplifies associated circuitry by eliminating the bias supply. In addition, grounded-grid operation is attractive since a power gain as high as twenty times can be obtained with the 3-500Z in a cathode-driven circuit.

GENERAL CHARACTERISTICS [1]

ELECTRICAL

Filament: Thoriated Tungsten	
Voltage	5.0 ± 0.25 V
Current, at 5.0 volts	14.2 A
Amplification Factor (Average)	130
Direct Interelectrode Capacitances (grounded filament)[2]	
Input	8.3 pF
Output	0.07 pF
Feedback	4.7 pF
Direct Interelectrode Capacitances (grounded grid)[2]	
Input	8.3 pF
Output	4.7 pF
Feedback	0.07 pF
Frequency of Maximum Rating:	
CW	110 MHz

1. Characteristics and operating values are based upon performance tests. These figures may change without notice as the result of additional data or product refinement. EIMAC Division of Varian should be consulted before using this information for final equipment design.
2. In Shielded Fixture.

MECHANICAL

Maximum Overall Dimensions:	
Length	6.00 in; 152.40 mm
Diameter	3.44 in; 87.33 mm
Net Weight	7.0 oz; 198.5 gm
Operating Position	Vertical, base down or up
Maximum Operating Temperature:	
Plate Seal	225°C
Base Seals	200°C
Cooling	Radiation and forced air
Base	5 Pin Special

(Revised 11-1-73) © 1968, 1970, 1973 by Varian

Printed in U.S.A.

Recommended Socket . . . . . EIMAC SK-410
Recommended Chimney . . . . . EIMAC SK-406
Recommended Heat-Dissipating Connector:
Plate HR-6

RADIO FREQUENCY LINEAR AMPLIFIER CATHODE DRIVEN

Class AB_2

MAXIMUM RATINGS:

DC PLATE VOLTAGE	4000	VOLTS
DC PLATE CURRENT	0.4	AMPERE
PLATE DISSIPATION	500	WATTS
GRID DISSIPATION	20	WATTS

TYPICAL OPERATION (Frequencies to 110 MHz)
Class AB2, Peak Envelope or Modulation Crest Conditions

Plate Voltage	1500	2000	2500	3000	3500	Vdc
Cathode Voltage[1]	0	0	0	+10	+15	Vdc
Zero Signal Plate Current[2]	65	95	130	62	53	mAdc
Single-Tone Plate Current, CW[3/4]	400	400	400	400	400	mAdc
Two-Tone Plate Current	260	270	280	268	262	mAdc
Single-Tone Grid Current[2]	130	130	120	108	108	mAdc
Two-Tone Grid Current[2]	80	80	70	60	58	mAdc
Single-Tone Power Input	600	800	1000	1200	1400	W
Useful Output Power, CW or PEP	330	500	600	740	890	W
Resonant Load Impedance	1600	2750	3450	4200	5000	Ω
Intermodulation Distortion Products[5]						
3rd Order	-46	-38	-33	-40	-40	db
5th Order	---	---	---	-46	-45	db

1. Zener diode positive bias used at plate potentials of 3 kV and above.
2. Approximate value.
3. Currents listed correspond to SSB, or "two-tone" average current at peak of signal envelope.
4. Single-tone current for 3500 Vdc operation may reach this value during short periods of circuit adjustment only.
5. Intermodulation distortion products are referenced against one tone of a two equal tone signal.

RADIO FREQUENCY POWER AMPLIFIER OR OSCILLATOR GRID DRIVEN, CATHODE DRIVEN

Class AB_2 and C Telegraphy or FM
(Key-Down Conditions)

MAXIMUM RATINGS:

DC PLATE VOLTAGE	4000	VOLTS
DC PLATE CURRENT	0.35	AMPERE
PLATE DISSIPATION	500	WATTS
GRID DISSIPATION	20	WATTS

TYPICAL OPERATION (Frequencies to 110 MHz)

	Grid Driven		Cathode Driven		
Plate Voltage	3000	3500	3000	3500	Vdc
Grid Voltage	0	-75	0	-75	Vdc
Plate Current	350	300	333	350	mAdc
Grid Current	115	115	108	118	mAdc
Peak rf (Cathode) (Grid) Voltage	---	187	215	215	v
Measured Driving Power	30	22	87	98	W
Plate Input Power	1050	1050	1000	1225	W
Plate Dissipation	330	200	250	305	W
Useful Output Power	720	850	750	920	W
Resonant Load Impedance	4200	5700	4800	5500	Ω

PLATE MODULATED RADIO FREQUENCY POWER AMPLIFIER-GRID DRIVEN

Class C Telephony (Carrier Conditions)

MAXIMUM RATINGS:

DC PLATE VOLTAGE	3000	VOLTS
DC PLATE CURRENT	0.275	AMPERE
PLATE DISSIPATION[1]	330	WATTS
GRID DISSIPATION[2]	20	WATTS

1. Corresponds to 500 watts at 100% sine-wave modulation.
2. Average, with or without modulation.

TYPICAL OPERATION (Frequencies to 30 MHz)

Plate Voltage	3000	Vdc
Grid Voltage	-100	Vdc
Plate Current	275	mAdc
Grid Current[1]	120	mAdc
Peak rf Grid Voltage[1]	200	v
Calculated Driving Power	25	W
Plate Input Power	825	W
Plate Dissipation	185	W
Plate Output Power	640	W

1. Approximate value.

AUDIO FREQUENCY POWER AMPLIFIER OR MODULATOR
Class AB_2, Grid Driven (Sinusoidal Wave)

MAXIMUM RATINGS (Per Tube):

DC PLATE VOLTAGE[1]	4000	VOLTS
DC PLATE CURRENT	0.4	AMPERE
PLATE DISSIPATION	500	WATTS
GRID DISSIPATION	20	WATTS

1. See zero-bias operation in Application Section.
2. Approximate value.
3. Per Tube.
4. Nominal drive power is one-half peak power.

TYPICAL OPERATION (Two Tubes)

Plate Voltage	3000	Vdc
Grid Voltage	0	Vdc
Zero-Signal Plate Current[2]	300	mAdc
Max. Signal Plate Current	770	mAdc
Max. Signal Grid Current[2]	244	mAdc
Peak af Grid Voltage[3]	100	v
Peak Driving Power[4]	25	w
Plate Input Power	2310	W
Max. Signal Plate Dissipation	890	W
Plate Output Power	1420	W
Load Resistance (plate to plate)	8600	Ω

NOTE: TYPICAL OPERATION data are obtained by calculation from published characteristic curves or actual measurment. Adjustment of the rf grid voltage to obtain the specified plate current at the specified bias and plate voltages is assumed. If this procedure is followed, there will be little variation in output power when the tube is changed, even though there may be some variation in grid current. The grid current which results when the desired plate current is obtained is incidental and varies from tube to tube. These current variations cause no difficulty so long as the circuit maintains the correct voltage in the presence of the variations in current. If grid bias is obtained principally by means of a grid resistor, the resistor must be adjustable to obtain the required bias voltage when the correct rf grid voltage is applied.

RANGE VALUES FOR EQUIPMENT DESIGN

	Min.	Max.	
Filament: Current at 5.0 volts	13.5	14.7	A
Interelectrode Capacitances[1] (grounded filament connection)			
Input	6.5	10.0	pF
Output	---	0.18	pF
Feedback	4.2	5.2	pF
Interelectrode Capacitances[1] (grounded grid connection)			
Input	6.5	10.0	pF
Output	4.2	5.2	pF
Feedback	---	0.18	pF
Zero Signal Plate Current: (E_c = 0Vdc, E_b = 2500 Vdc)	90	180	mAdc

1. In Shielded Fixture.

APPLICATION

MECHANICAL

MOUNTING - The 3-500Z must be operated vertically, base up or down. A flexible connecting strap should be provided between the heat dissipating plate connector and the external plate circuit. The tube must be protected from severe vibration and shock.

SOCKET - The EIMAC SK-410 air system socket and SK-406 chimney are recommended for use with the 3-500Z. When a socket other than the SK-410 is used, provisions must be made for equivalent cooling of the base, the envelope, and the plate lead.

If a socket other than the EIMAC SK-410 is employed, the user must assure himself that lateral pressure is not applied to the tube pins and base seal. Otherwise damage to the tube may result.

CAUTION-GLASS IMPLOSION - The EIMAC 3-500Z is pumped to a very high vacuum, which is contained by a glass envelope. When handling a glass tube, remember that glass is a relatively fragile material, and accidental breakage can result at any time. Breakage will result in flying glass fragments, so safety glasses, heavy clothing, and leather gloves are recommended for protection.

COOLING - Forced-air cooling is required to maintain the base seals at a temperature below 200°C, and the plate seal at a temperature below 225°C. Air-flow requirements to maintain the above maximum temperatures are tabulated below. (For operation below 30 MHz)

Base-to-Anode Air Flow		
Anode Dissipation (Watts)	Air Flow (CFM)	Pressure Drop (inches-WC)
300	6.6	.023
400	10.3	.052
500	13.0	.082

The anode of the 3-500Z operates at a visibly red color at its maximum rated dissipation of 500 watts.

In all cases, air flow rates in excess of the minimum requirements will prolong tube life. NOTE: Two 3-500Z tubes in a single amplifier, chassis mounted, may be adequately cooled by use of a fan so mounted as to pressurize the space below the sockets. Fans suitable for use at or near sea level are Pamotor Model 2000, or Model 6500. The Rotron "Spartan" fan (3200 rpm) is also suitable, as is a #3, 3-inch squirrel cage blower (3100 rpm).

In all cases, the only criteria of proper cooling is the temperature of the tube seals. Tube temperatures may be measured with the aid of temperature sensitive paint, spray, or crayon. Suitable products are manufactured by the Tempil Division, Big Three Industrial Gas & Equipment Co., Hamilton Blvd., So. Plainfield, N.J. 07080.

ZERO-BIAS OPERATION - Operation at zero-bias is not recommended with plate voltages over 3000 since plate dissipation may be exceeded. A zener diode placing positive bias on the cathode or other constant voltage source may be used to reduce zero signal plate current at plate potentials over 2500 volts.

CLASS-C OPERATION - Although specifically designed for linear amplifier service, the 3-500Z may be operated as a class-C power amplifier or oscillator or as a plate-modulated radio-frequency power amplifier. The zero-bias characteristic of the 3-500Z can be used to advantage in class-C amplifiers operating at plate voltages of 3000 volts or below by employing only grid-resistor bias. If driving power fails, plate dissipation is then kept to a low value because the tube will be operating at the normal static zero-bias conditions.

ELECTRICAL

FILAMENT OPERATION - The rated filament voltage for the 3-500Z is 5.0 volts. Filament voltage, as measured at the socket, must be maintained within the range of 4.75 to 5.25 volts to obtain maximum tube life.

CAUTION-HIGH VOLTAGE - Operating voltage for the 3-500Z can be deadly, so the equipment must be designed properly and operating precautions must be followed. Design equipment so that no one can come in contact with high voltages. All equipment must include safety enclosures for high voltage circuits and terminals, with interlock switches to open the primary circuits of the power supply and to discharge high voltage capacitors whenever access doors are opened. Interlock switches must not be bypassed or "cheated" to allow operation with access doors open. Always remember that HIGH VOLTAGE CAN KILL.

INTERMODULATION DISTORTION - Typical operating conditions with distortion values included are the result of data taken during actual operation at 2 megahertz. Intermodulation values listed are those measured at the full peak envelope power noted.

INPUT CIRCUIT - When the 3-500Z is operated as a grounded-grid rf amplifier, the use of a resonant tank in the cathode circuit is recommended in order to obtain greatest linearity and power output. For best results with a single-ended amplifier it is suggested that the cathode tank circuit operate at a Q of two or more.

SPECIAL APPLICATIONS - If it is desired to operate this tube under conditions widely different from those given here, write to Power Crid Tube Division, EIMAC Division of Varian, 301 Industrial Way, San Carlos, California 94070 for information and recommendation.

3-500Z OUTLINE DRAWING AND PIN CONNECTIONS

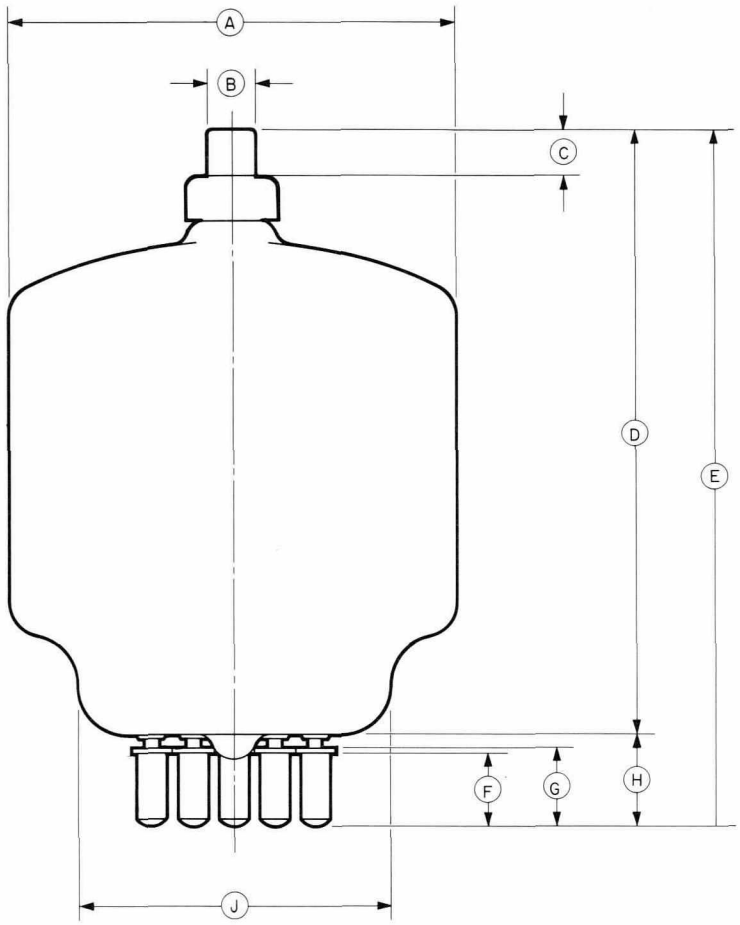

DIMENSIONAL DATA						
DIM	INCHES			MILLIMETERS		
	MIN.	MAX.	REF.	MIN.	MAX.	REF.
A	- -	3.438	- -	- -	87.33	- -
B	0.350	0.365	- -	8.87	9.27	- -
C	0.328	0.359	- -	8.33	9.12	- -
D	- -	- -	4.844	- -	- -	123.04
E	5.500	6.000	- -	139.70	152.40	- -
F	0.625	0.750	- -	15.87	19.05	- -
G	0.688	0.812	- -	17.48	20.62	- -
H	- -	- -	0.906	- -	- -	23.01
J	- -	2.500D	- -	- -	63.50	- -
K	- -	- -	30°TYP.	- -	- -	30°TYP.
L	0.185D	0.191D	- -	4.70	4.85	- -
M	- -	- -	1.250D	- -	- -	31.75D

NOTE

BASE PINS (L)
THEY CAN BE FREELY INSERTED INTO A GAUGE ¼" THICK WITH HOLE DIA'S OF .204 LOCATED ON TRUE CENTERS BY THE GIVEN DIMENSIONS (K) & (M).

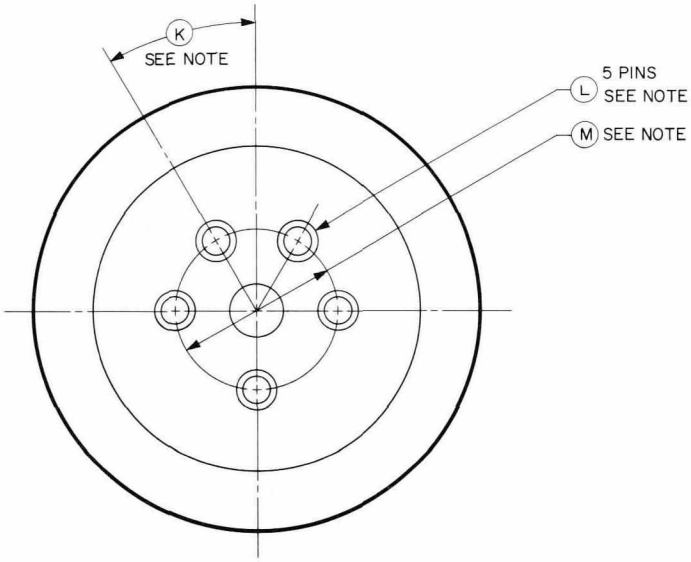

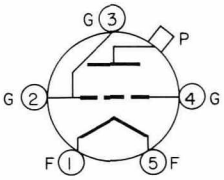

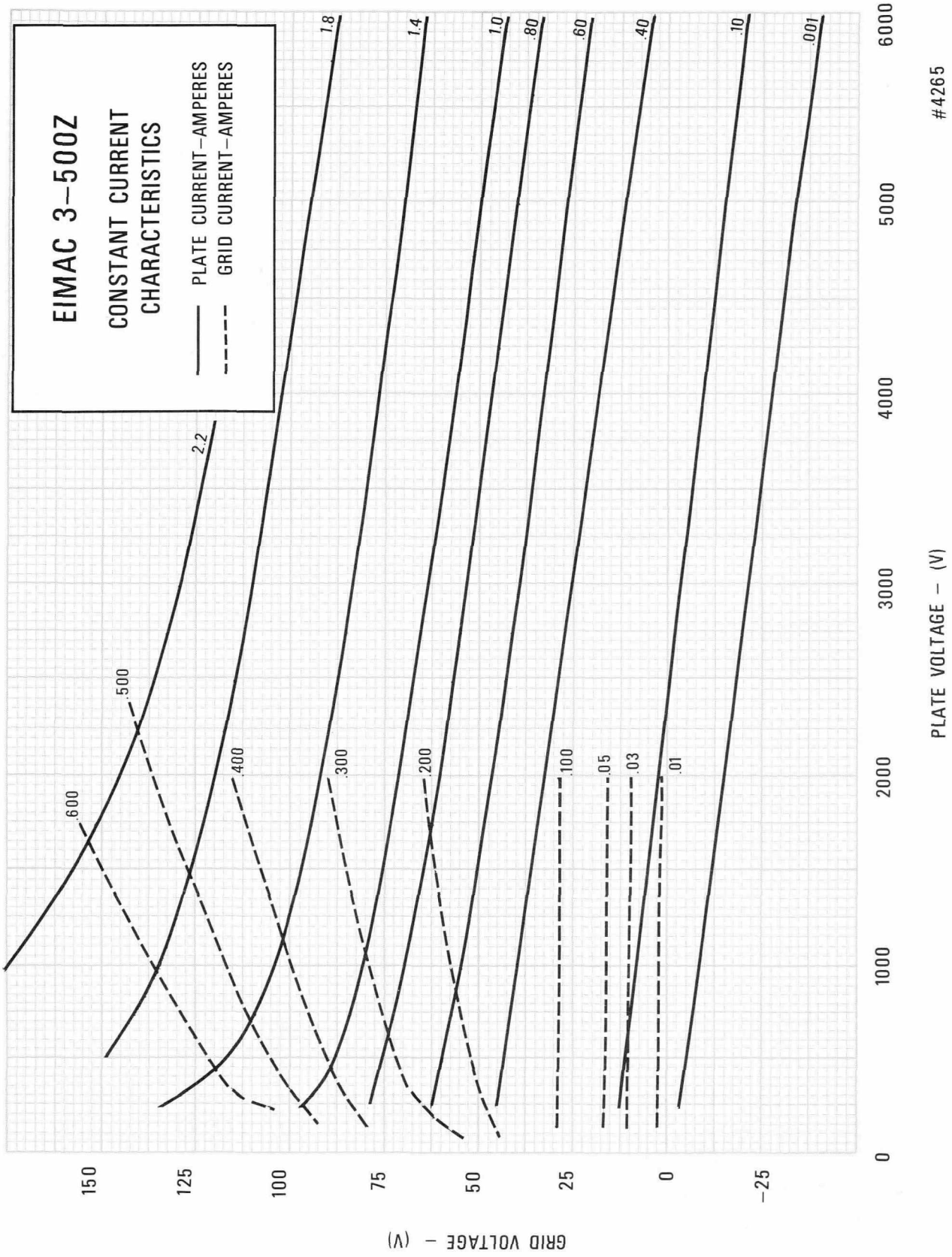
EIMAC 3-500Z
CONSTANT CURRENT CHARACTERISTICS
PLATE CURRENT-AMPERES
GRID CURRENT-AMPERES
2.2
1.8
1.4
1.0
.80
.60
.40
.10
.001
.600
.500
.400
.300
.200
.100
.05
.03
.01
150
125
100
75
50
25
0
-25
GRID VOLTAGE - (V)
0
1000
2000
3000
4000
5000
6000
PLATE VOLTAGE - (V)
#4265

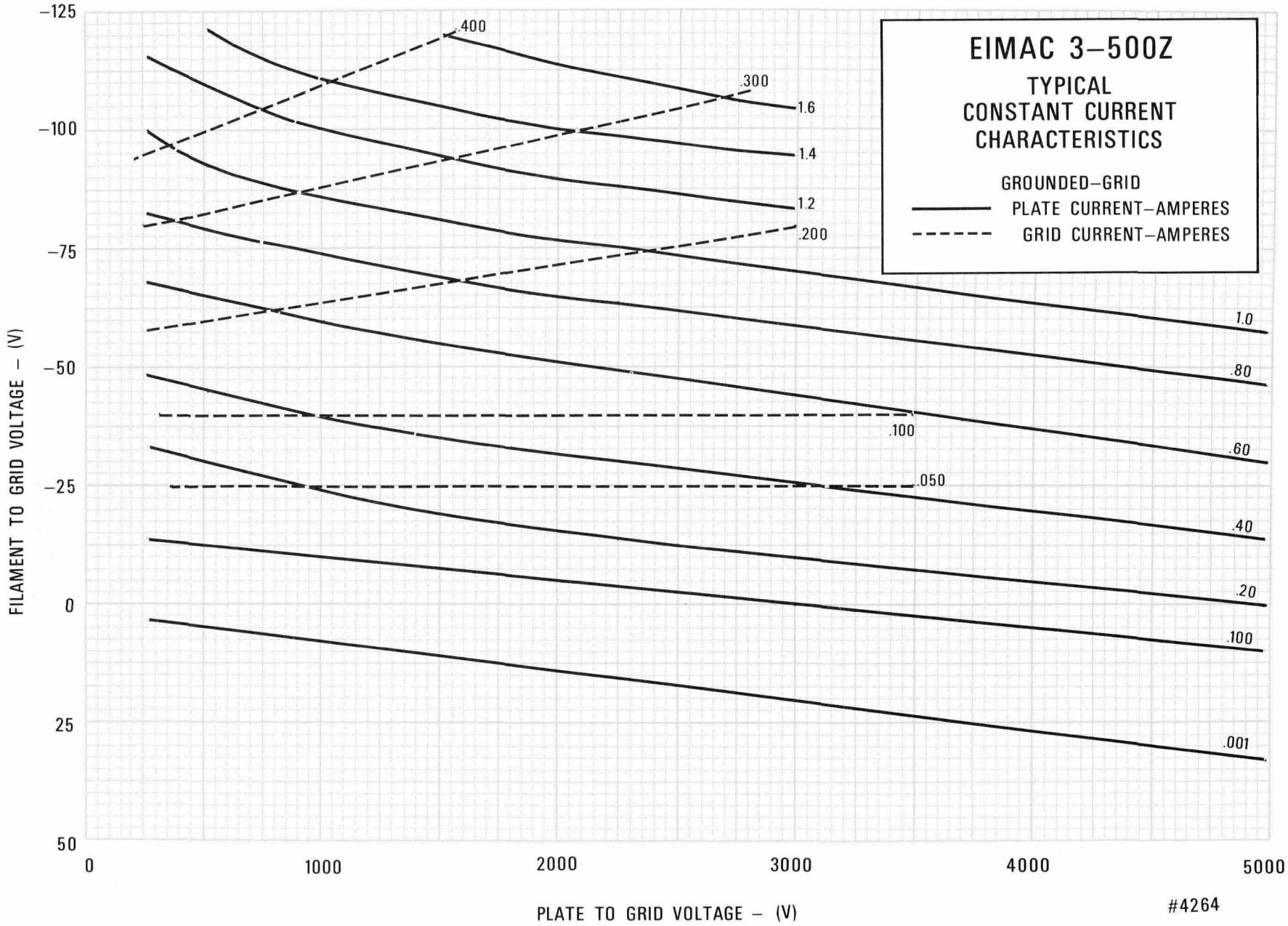
EIMAC 3–500Z
TYPICAL
CONSTANT CURRENT
CHARACTERISTICS
GROUNDED–GRID
PLATE CURRENT–AMPERES
GRID CURRENT–AMPERES
.400
.300
.200
.100
.050
1.6
1.4
1.2
1.0
.80
.60
.40
.20
.100
.001
–125
–100
–75
–50
–25
0
25
50
FILAMENT TO GRID VOLTAGE – (V)
0
1000
2000
3000
4000
5000
PLATE TO GRID VOLTAGE – (V)
#4264

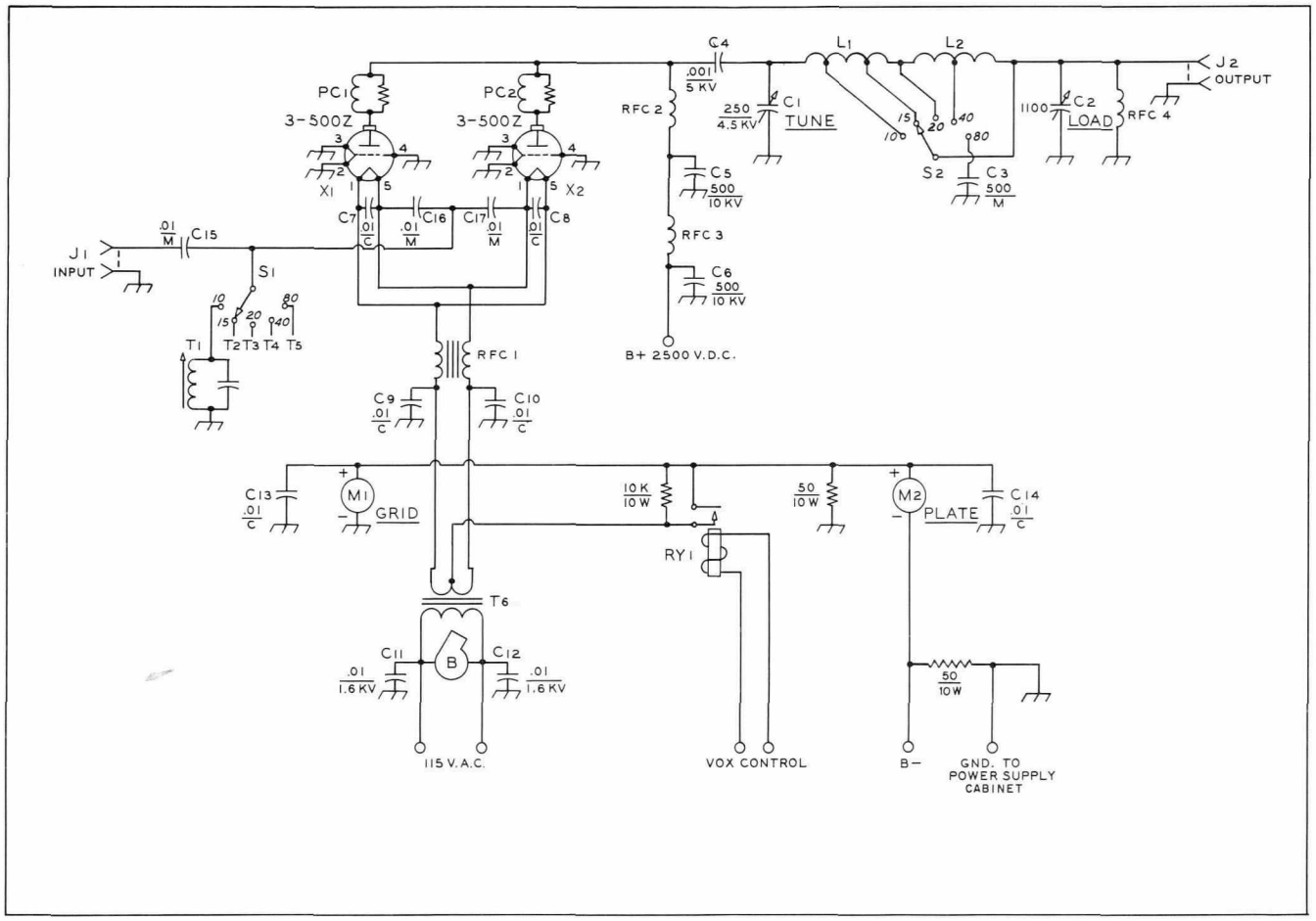

TYPICAL CATHODE DRIVEN (GROUNDED GRID) AMPLIFIER CIRCUIT FOR TWO 3-500Z TUBES

C-1--250 pF, 4.5 kV (Johnson 154-16).

C-2--1100 pF, 3 section. Jackson Bros. LE-3-4595-380. (M. Swedgal, 258 Broadway, N.Y. 10007).

C-3--500 pF, 2.5 kV mica. Sangamo H-5347.

C-4--.001 μF, 5 kV. Centralab 858S-1000.

C-5, C-6--500 pF, 10 kV, TV "door knob" capacitor.

C-7 thru C-10--.01 μF, 600V ceramic capacitor (Centralab DD-103).

C-11, C-12--.01 μF, 1.6 kV ceramic capacitor (Centralab DD16-103).

C-13, C-14--.01 pF, 600V ceramic capacitor (Centralab DD-103).

C-15 thru C-17--.01 μF, 1 kV mica capacitor (Sangamo H-2210).

M-1--500 mAdc.

M-2--1000 mAdc.

RFC-1--50 μH. 14 bifilar turns #10 AWG enamelled wire wound on ferrite core, 5 inches long, ½ inch diameter. (Indiana General CF-503. Newark Electronics Co. catalog number 59F-1521). Notch core with file and break to length.

RFC-2--100 μH, 1 Adc. 112 turns #26 AWG, spacewound wire diameter on 1" diam., 6" long ceramic form (Centralab X-3022H insulator). Series resonant with terminals shorted to 24.5 MHz.

RFC-3--1.7 μH, 1 Adc. 20 turns #26 AWG wound on 100K, 2W resistor (J.W. Miller RFC-144).

RY-1--VOX operated SPST relay. Energized when transmit.

PC-1, PC-2--Three 100 ohm, 2W carbon resistors in parallel. Three turns #14 AWG, ½" diam., ¾" long in parallel with resistors. (Equivalent: Ohmite P-300 reduced to 3 turns).

J-1, J-2--Coaxial receptacle. UG-58A/U, for type N connector.

T-6--5 v at 30 amp. Chicago-Stancor P-4648.

X-1, X-2--EIMAC SK-410 socket and EIMAC SK-406 chimney.

B-Blower--13 cubic feet at 0.2 inch back pressure. Use #3 impeller at 3100 rpm. (Ripley 8472, Dayton 1C-180 or Redmond AK-2H-01AX).

CATHODE CIRCUIT COMPONENTS:

T-1 (10 meters)--0.15 μH. 4 turns #14 AWG on ½-inch form, ½-inch long. Parallel capacitance: 200 pF, 1 kV silver mica capacitor. Resonant at 28.7 MHz.

T-2 (15 meters)--0.15 μH, same as T-1. Resonant at 21.3 MHz with 470 pF, 1 kV silver mica capacitor.

T-3 (20 meters)--0.31 μH. 6 turns #14 AWG on ½-inch form, ½-inch long, slug tuned (National XR-50). Resonant at 14.2 MHz with 470 pF, 1 kV silver mica capacitor.

T-4 (40 meters)--0.31 μH, same as T-3. Resonant at 7.2 MHz with 940 pF. (Two 470 pF, 1 kV silver mica capacitors in parallel).

T-5 (80 meters)--1.3 μH. 13 turns #18 AWG on ½-inch diameter form, ½-inch long, slug tuned (National XR-50). Resonant at 3.8 MHz with 940 pF, same as T-4.

PLATE CIRCUIT COMPONENTS (for plate potential of 2500 Vdc), $R_L = 1725\Omega$:

The 10, 15 and 20 meter inductor (L_1) may be 10½ turns #8 AWG copper wire (or 3/16" tubing) 2" diam., 3" long. Ten meter tap is 5¼ turns from plate end; 15 meter tap is 7¼ turns from plate end. The 40-80 meter coil (L_2) may be 16 turns #10 AWG, 2½" diam., 4" long. Forty meter tap is 8 turns from junction with coil L-1.

S-2--Single pole ceramic switch, high voltage, 30° index. Radio Switch Corp. Model 86-A.

NOTE: For additional data on plate circuit design, write for Amateur Service Bulletin #30, "Pi and Pi-L Networks for Linear Amplifier Service"

NOTE: B- of power supply is floating and grounded only through plate meter M_2 and the 50 ohm safety resistor. Cabinet of power supply should be grounded to amplifier cabinet as safety measure.