from JEDEC release #4712, May 25, 1964

ELECTRONICS

33JV6
COMPACTRON BEAM PENTODE
FOR TV HORIZONTAL-DEFLECTION AMPLIFIER APPLICATIONS

DESCRIPTION AND RATING

The 33JV6 is a compactron beam-power pentode designed for use as the horizontal-deflection amplifier in television receivers. A separate connection is provided for the beam plates to minimize "snivets".

GENERAL

ELECTRICAL

Cathode - Coated Unipotential

Heater Characteristics and Ratings

Heater Voltage, AC or DC*	33	Volts
Heater Current‡	0.3±0.02	Amperes
Heater Warm-up Time, Average§	11	Seconds
Direct Interelectrode Capacitances, approximate¶		
Grid-Number 1 to Plate: (g1 to p)	0.4	pf
Input: g1 to (h + k + g2 + b.p.)	22	pf
Output: p to (h + k + g2 + b.p.)	9.0	pf

MECHANICAL

Operating Position - Any
Envelope - T-12, Glass
Base - E12-74, Button 12-Pin
Outline Drawing - EIA 12-58

Maximum Diameter	1.563	Inches
Maximum Over-all Length	3.375	Inches
Maximum Seated Height	3.000	Inches

MAXIMUM RATINGS

Design-Maximum ratings are limiting values of operating and environmental conditions applicable to a bogey electron tube of a specified type as defined by its published data and should not be exceeded under the worst probable conditions.

The tube manufacturer chooses these values to provide acceptable serviceability of the tube, making allowance for the effects of changes in operating conditions due to variations in the characteristics of the tube under consideration.

The equipment manufacturer should design so that initially and throughout life no design-maximum value for the intended service is exceeded with a bogey tube under the worst probable operating conditions with respect to supply-voltage variation, equipment component variation, equipment control adjustment, load variation, signal variation, environmental conditions, and variations in the characteristics of all other electron devices in the equipment.

PHYSICAL DIMENSIONS

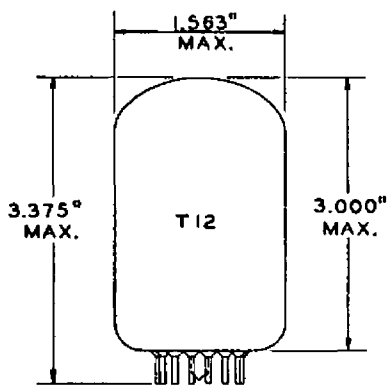

EIA 12-58

TERMINAL CONNECTIONS

Pin 1 - Heater
Pin 2 - Cathode
Pin 3 - Grid Number 2 (Screen)
Pin 4 - Beam Plates
Pin 5 - No Connection
Pin 6 - No Connection
Pin 7 - Plate
Pin 8 - No Connection
Pin 9 - No Connection
Pin 10 - Beam Plates
Pin 11 - Grid Number 1
Pin 12 - Heater

BASING DIAGRAM

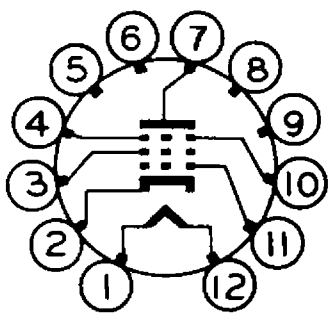

EIA 12FK

The tubes and arrangements disclosed herein may be covered by patents of General Electric Company or others. Neither the disclosure of any information herein nor the sale of tubes by General Electric Company conveys any license under patent claims covering combinations of tubes with other devices or elements. In the absence of an express written agreement to the contrary, General Electric Company assumes no liability for patent infringement arising out of any use of the tubes with other devices or elements by any purchaser of tubes or others.

MAXIMUM RATINGS (Cont'd)

HORIZONTAL-DEFLECTION AMPLIFIER SERVICE#—DESIGN-MAXIMUM VALUES

DC Plate-Supply Voltage (Boost + DC Power Supply)	770	Volts
Peak Positive Pulse Plate Voltage	6000	Volts
Peak Negative Pulse Plate Voltage	1500	Volts
Positive DC Beam Plate Voltage	70	Volts
Screen Voltage	220	Volts
Negative DC Grid-Number 1 Voltage	55	Volts
Peak Negative Grid-Number 1 Voltage	330	Volts
Plate Dissipation∆	18	Watts
Screen Dissipation	3.5	Watts
DC Cathode Current	230	Milliamperes
Peak Cathode Current	800	Milliamperes
Heater-Cathode Voltage		
Heater Positive with Respect to Cathode		
DC Component	100	Volts
Total DC and Peak	200	Volts
Heater Negative with Respect to Cathode		
Total DC and Peak	200	Volts
Grid-Number 1 Circuit Resistance	1.0	Megohms
Bulb Temperature at Hottest Point	220	C

CHARACTERISTICS AND TYPICAL OPERATION

AVERAGE CHARACTERISTICS

Plate Voltage	5000	60	130	Volts
Beam Plates, Connected to Cathode at Socket				
Screen Voltage	130	130	130	Volts
Grid-Number 1 Voltage	---	0**	-20	Volts
Plate Resistance, approximate	---	---	11000	Ohms
Transconductance	---	---	9100	Micromhos
Plate Current	---	410	50	Milliamperes
Screen Current	---	24	1.75	Milliamperes
Grid-Number 1 Voltage, approximate Ib = 1.0 Milliamperes	-66	---	-33	Volts
Triode Amplification Factor‡‡	---	---	4.7	

NOTES

* Heater voltage for a bogey value tube at If = 0.3 amperes.

‡ The equipment designer should design the equipment so that heater current is centered at the specified bogey value, with heater supply variations restricted to maintain heater current within the specified tolerance.

§ The time required for the voltage across the heater to reach 80 percent of the bogey value after applying 4 times the bogey heater voltage to a circuit consisting of the tube heater in series with a resistance equal to 3 times the bogey heater voltage divided by the bogey heater current.

¶ Without external shield.

\# For operation in a 525-line, 30-frame television system as described in "Standards of Good Engineering Practice Concerning Television Broadcast Stations", Federal Communications Commission. The duty cycle of the voltage pulse must not exceed 15 percent of one scanning cycle.

∆ In stages operating with grid-leak bias, an adequate cathode-bias resistor or other suitable means is required to protect the tube in the absence of excitation.

** Applied for short interval (two seconds maximum) so as not to damage tube.

‡‡ Triode connection (screen tied to plate) with Eb = Ec2 = 130 volts and Ec1 = -20 volts.

AVERAGE PLATE CHARACTERISTICS

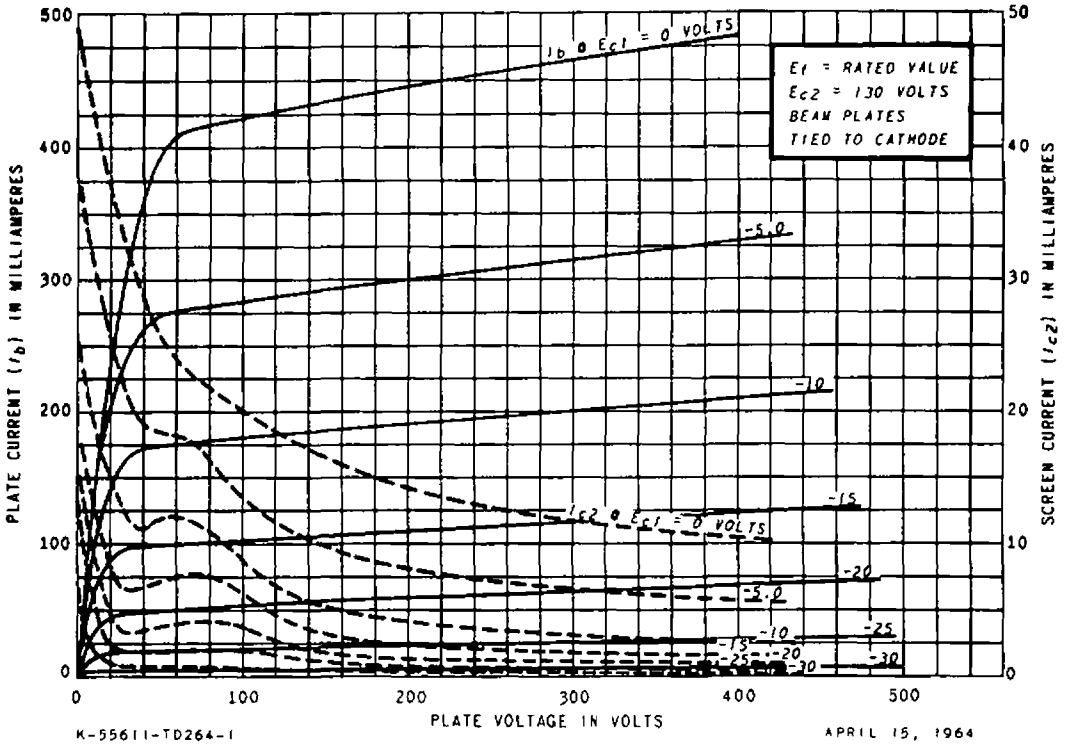

AVERAGE PLATE CHARACTERISTICS

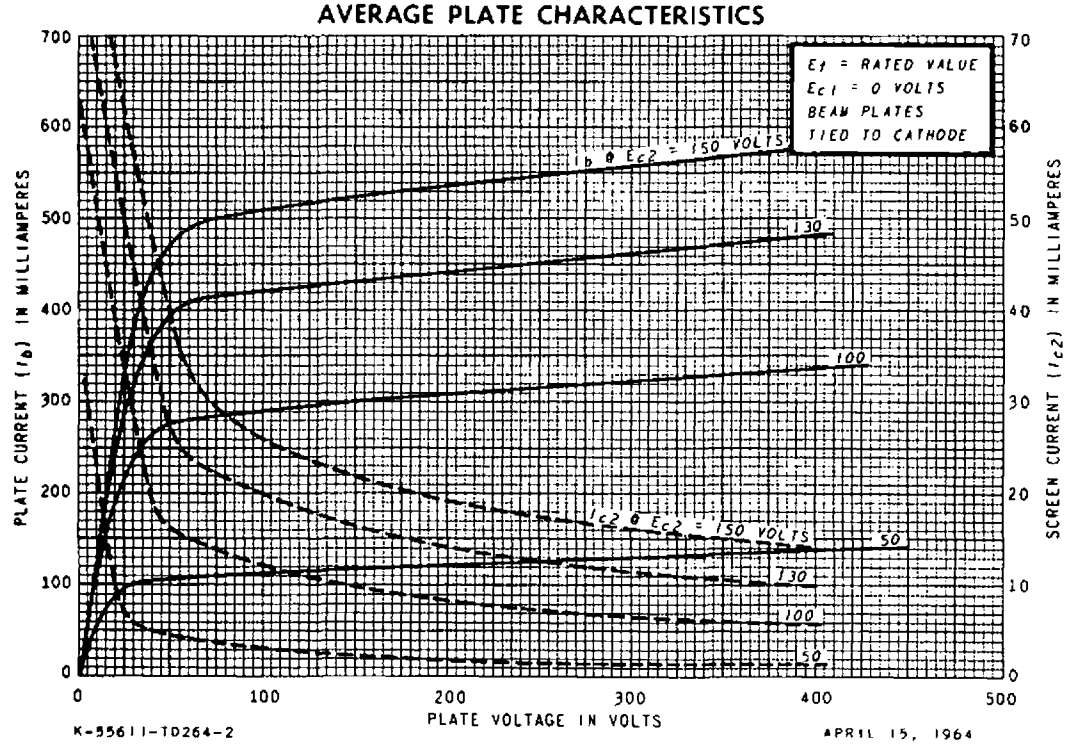

AVERAGE TRANSFER CHARACTERISTICS

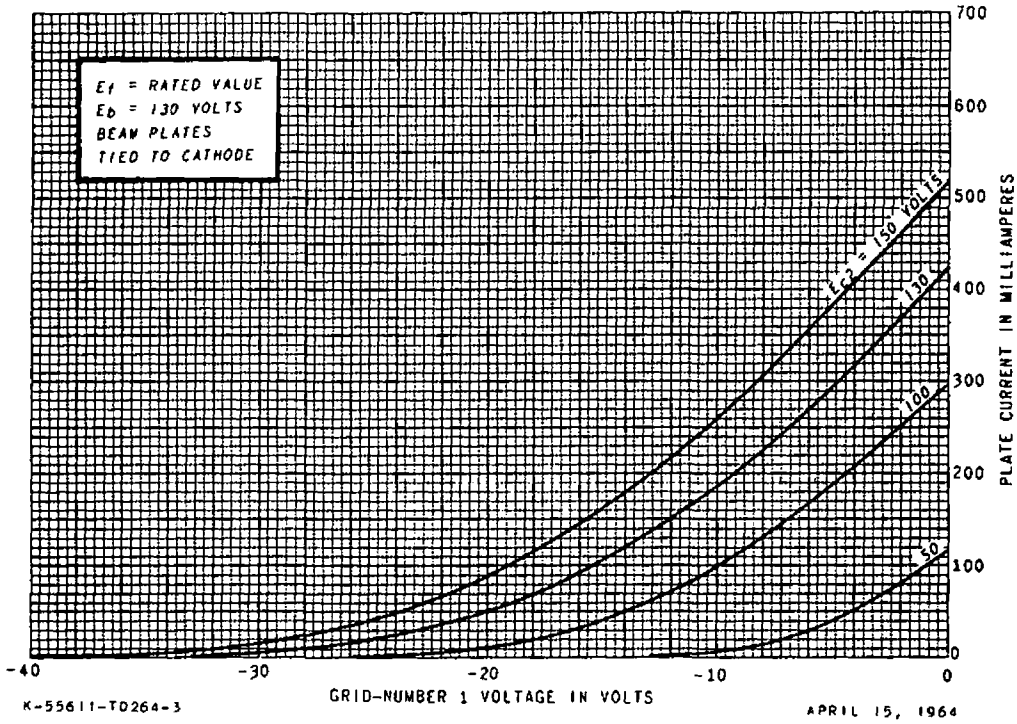

AVERAGE TRANSFER CHARACTERISTICS

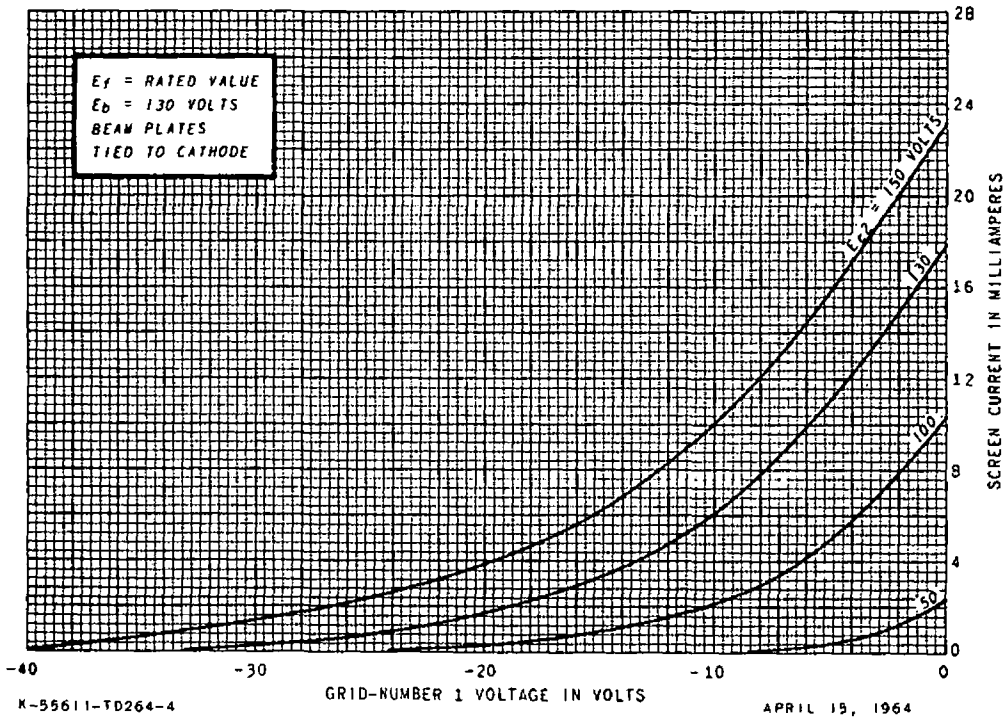

TUBE DEPARTMENT

GENERAL ELECTRIC

Owensboro, Kentucky