Twin Triode

4074A

Characteristics are for one section only unless otherwise specified. Both sections are identical.

CATHODE.

Indirectly-heated Oxide-coated

Voltage	6.3	V
Nominal current	0.8	A

RATING.

Amplification factor	Measured at Va 250V, Vg_1—7V	14	
Impedance		4,700	Ω

DIRECT INTER-ELECTRODE CAPACITIES.

Grid to anode	2.7	pF
Grid to cathode	6.0	pF
Anode to cathode	1.3	pF

DIMENSIONS.

Maximum overall length	132	mm.
Maximum bulb diameter	46	mm.
Base American medium 7 pin		
Net weight	75	g.

MAXIMUM RATINGS.

Maximum direct anode voltage	300	V
Maximum direct anode current	50	mA
Maximum anode dissipation	5	W
Maximum frequency for above ratings	100	Mc/s
Maximum frequency of operation	300	Mc/s

Twin Triode

4074A

Characteristics are for one section only unless otherwise specified. Both sections are identical.

TYPICAL OPERATING CONDITIONS.

AUDIO FREQUENCY.

Class A. Amplifier.
(Two sections in parallel).

Direct anode voltage	300	V
Grid bias	—13	V
Anode current—2 sections	30	mA
Load resistance	7,000	Ω
Power output	1.0	W

The output power may be increased to 1.2 W by connecting the two sections in push-pull.

Class B. Power Amplifier.
(Two sections in push-pull).

Direct anode voltage	300	V
Grid bias	—16	V
Direct anode current per section—zero signal	7	mA
Direct anode current per section—max. signal	37	mA
Peak AF grid to grid voltage	120	V
Power output—2 sections	12	W. approx.

RADIO FREQUENCY.

Class C. Push-pull Power Amplifier or Oscillator Unmodulated.

Direct anode voltage	300	V
Grid bias	—36	V
Direct anode current	80	mA
Direct grid current	18	mA
Power output	14	W approx.

Twin Triode

4074A

Characteristics are for one section only unless otherwise specified. Both sections are identical.

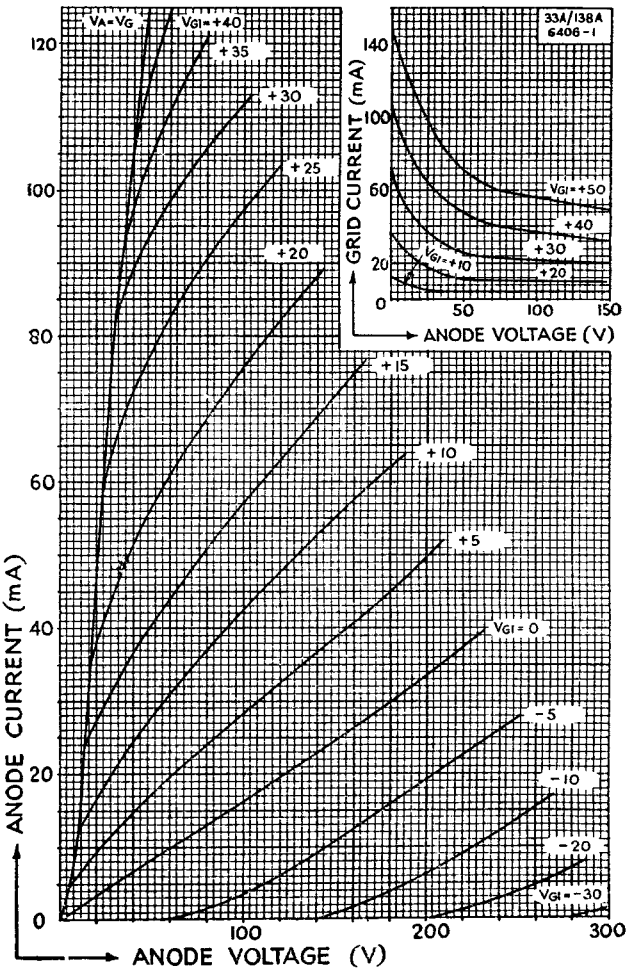

Twin Triode

4074A
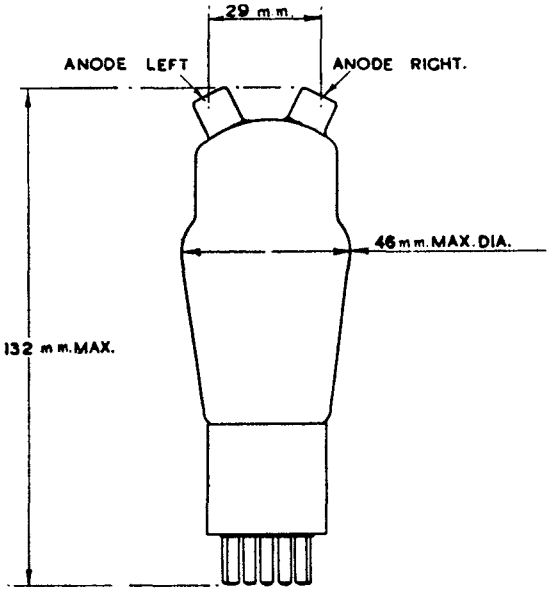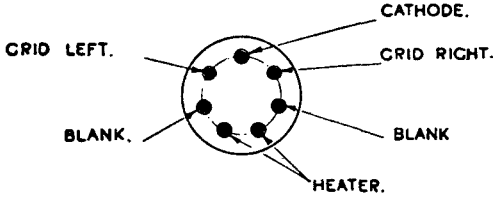
Characteristics are for one section only unless otherwise specified. Both sections are identical.