GENERAL

The 31D15 is an 8½″ diagonal rectangular tube with 90° magnetic deflection and low voltage electrostatic focusing. It is intended for use in industrial monitoring equipment.

RATINGS

Heater voltage	V_h	6·3	V
Heater current	I_h	0·3*	A
Maximum second and fourth anode voltage	$V_{a2,a4(max)}$	15**	kV
Minimum second and fourth anode voltage	$V_{a2,a4(min)}$	8·0	kV
Maximum third anode voltage	$V_{a3(max)}$	±700	V
Maximum first anode voltage	$V_{a1(max)}$	500	V
Maximum heater/cathode voltage, heater negative (d.c.)	$V_{h\text{-}k(max)}$	200	V
Maximum peak heater/cathode voltage, heater negative (d.c.)	$V_{h\text{-}k(pk)max}$	400†‡	V

* The cathode-ray tube heater should always be connected at the chassis end if used in a series heater chain.

** 15kV is a design centre rating, the absolute rating of 18kV must not be exceeded.

† Absolute rating.

‡ During a warming-up period not exceeding one minute.

INTER-ELECTRODE CAPACITANCES

		§	§§	
Grid/All other electrodes	$C_{g\text{-}all}$	7·0	8·5	pF
Cathode/All other electrodes	$C_{k\text{-}all}$	3·0	3·5	pF
Anode 2 and Anode 4/External conductive coating (approx)	$C_{a2,a4\text{-}M}$	400		pF

§ Inter-electrode capacitances with holder capacitance balanced out.

§§ Inter-electrode capacitances including an AEI B8H holder VH68/81 (8-pin).

TYPICAL OPERATION

Second and fourth anode voltage	$V_{a2,a4}$	12	kV
First anode voltage	V_{a1}	400	V
Third anode voltage for focus (range)	V_{a3}	±200	V
Grid bias for cut-off of raster	V_g	−30 to −72	V
Average peak/peak modulating voltage for modulation up to 150μA		24	V

Associated Electrical Industries Limited
Radio Components Department
Tel: GERrard 9797

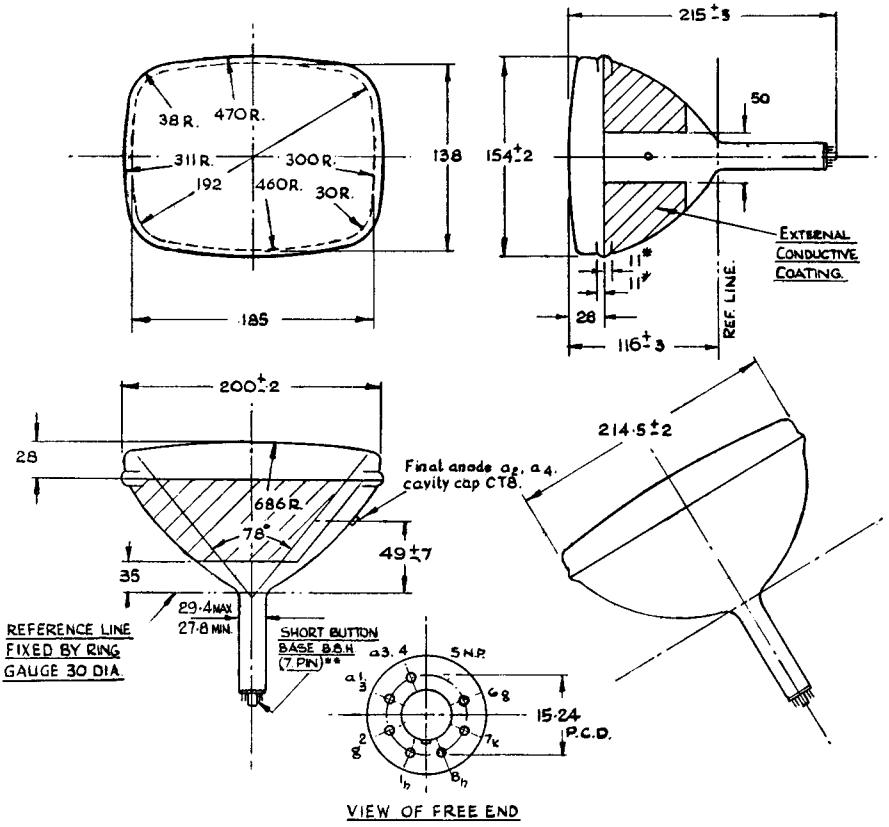

All dimensions in millimetres.

Not to be scaled.

Notes

* During the face sealing operation the glass in this area (total 22 mm) may be disturbed. As the shape of the contour within this area may be either convex or concave the bulb should not be gripped within this region unless special precautions are taken (such as the use of resilient packing material).

** The socket for the B8H button base should not be rigidly mounted, it should have flexible leads and be allowed to move freely. The design of the socket should be such that the wiring cannot impress lateral strains through the socket contacts on the base.