30L1/PCC84 ←

CASCODE R.F. DOUBLE TRIODE

GENERAL

The 30L1/PCC84 is a miniature based indirectly heated double triode intended for use as cascode amplifier at V.H.F. in AC/DC powered equipment having series connected heater chains. The input is normally connected to the grid of triode 1, the output from this section being fed to the cathode of triode 2, which is operated as an earthed grid stage. This combination provides a low noise high gain amplifier, particularly suited to T.V. receivers operating in Band III.

RATING

Heater Current	(amps)	I_h	0·3
Heater Voltage	(volts)	V_h	7·0
Maximum Anode Voltage	(volts)	$V_{a(max)}$	250
Maximum Anode Dissipation (either section)	(watts)	$P_{a(max)}$	2·0
Maximum Cathode Current (per section)	(mA)	$I_{k(max)}$	18
Amplification Factor		μ	24*
Mutual Conductance	(mA/V)	g_m	6*
Anode Impedance	(ohms)	r_a	4,000*
Maximum Grid to Cathode Resistance (Section 1)	(ohms)	$R_{g'-k'(max)}$	500,000
Maximum Negative Grid Voltage	(volts)	$V_{g(max)}$	50
Maximum Grid to Cathode Resistance (Section 2)	(ohms)	$R_{g''-k''\ (max)}$	500,000†
Maximum Grid to Cathode Resistance (Section 2)	(ohms)	$R_{g''-k''(max)}$	22,000‡
Maximum Potential Heater to Cathode 1	(volts)	$V_{h-k'(max)}$	90
Maximum Potential Heater to Cathode 2 (with heater positive)	(volts)	$V_{h-k''(max)}$	90

Rating *(continued overleaf)*

Indicates a change ←

30L1/PCC84 ←

CASCODE R.F. DOUBLE TRIODE

Maximum Potential Heater to Cathode 2 (with heater negative) (peak)	(volts)	$V_{h-k''(pk)\ max}$	250§

NOTES

† With potentiometer bias from H.T. Line.

‡ With grid current bias.

* Taken at $V_a = 90v$; $I_a = 12$ mA

§ *Maximum D.C. component = 180 volts.*

INTER-ELECTRODE CAPACITANCES (pF)

		‖	¶
Anode 1/Grid 1	$c_{a'-g'}$	1·2	1·2
Grid 1/Cathode 1, Heater and Shields	$c_{g'-k',h,s}$	2·8	4·1
Anode 1/Cathode 1, Heater and Shields	$c_{a'-k',h,s}$	2·0	3·25
Anode 2/Cathode 1, Heater and Shields	$c_{a''-k',h,s}$	3·2	4·5
Cathode 2/Cathode 1, Heater and Shields	$c_{k''-k',h,s}$	5·0	6·3
Anode 2/Cathode 2	$c_{a''-k''}$	0·16	0·18
Grid 1/Anode 2	$c_{g'-a''}$	0·006	0·009
Anode 2/Anode 1	$c_{a''-a'}$	0·01	0·01

‖ Inter-electrode capacity with holder capacity balanced out but with cylindrical screening can.

¶ Total capacity including ceramic B9A holder with cylindrical screen. Carr Fastener holder type 76/804 E/T.
The symbol ' s ' indicates shields and earthy parts of the valve holder.

Indicates a change ←

30L1/PCC84 ←

CASCODE R.F. DOUBLE TRIODE

DIMENSIONS

Maximum Overall Length	(mm)	56
Maximum Diameter	(mm)	22·2
Maximum Seated Height	(mm)	49
Approximate Nett Weight	(ozs)	½
Approximate Packed Weight	(ozs)	¾

MOUNTING POSITION—Unrestricted.

TYPICAL OPERATION—(As a cascode amplifier)

The input triode is connected as an earthed cathode stage and coupled directly to section 2 connected as an earthed grid stage. The valve sections are series fed, i.e., anode of section 1 connected directly to cathode of section 2.

			Circuit I*	*Circuit* II*
H.T. Supply Voltage	(volts)	V_b	200	200
Anode decoupling resistor, Section 2	(ohms)	$R_{a''}$	2,200	3,900
Anode current	(mA)	$I_{a'} = I_{a''}$	12·5	12·5
Grid bias voltage, section 1 (supplied by cathode resistor)	(volts)	V_g	—1·5	—1·5
Combined mutual conductance ($\delta i_a/\delta v_{g'}$)	(mA/V)		5·8	5·7
Approx. A.G.C. Volts to give combined mutual conductance of 100μ A/V	(volts)	$V_{g'}$	—7·4	—14
Self bias resistor, section 1	(ohms)	$R_{k'}$	120	120
Input Capacity, working †	(pF)	$C_{in\ (w)}$	4·56	4·56
Change in input capacity by biassing valve to cut-off	(pF)	$\triangle C_{in\ (w)}$	1·27	1·27

† Inter-electrode capacity with holder capacity balanced out but with cylindrical screening can.

* See Typical 30L1/PCC84 Cascode Bias Circuits.

Indicates a change ←

30L1/PCC84 ←

CASCODE R.F. DOUBLE TRIODE

BASE—Noval (B9A)

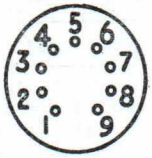

Viewed from Free End of Pins

CONNECTIONS

Pin 1	Cathode 2	k″
Pin 2	Grid 2, Shield	g″,s
Pin 3	Anode 2	a″
Pin 4	Heater	h
Pin 5	Heater	h
Pin 6	Grid 1	g′
Pin 7	Cathode 1, input	k'_{in}
Pin 8	Cathode 1, output	k'_{out}
Pin 9	Anode 1	a′

Indicates a change ←

30L1/PCC84 ←

CASCODE R.F. DOUBLE TRIODE

TYPICAL 30L1/PCC84 CASCODE BIAS CIRCUITS

Circuit 1

Valve Section 2, Potentiometer
Bias arrangement.

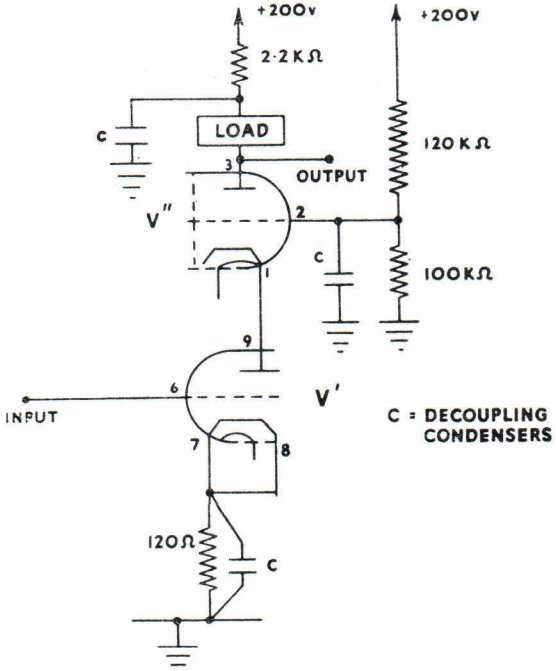

Indicates a change ←

30L1/PCC84 ←

CASCODE R.F. DOUBLE TRIODE

Circuit 2

Valve Section 2, Grid Current Bias arrangement.

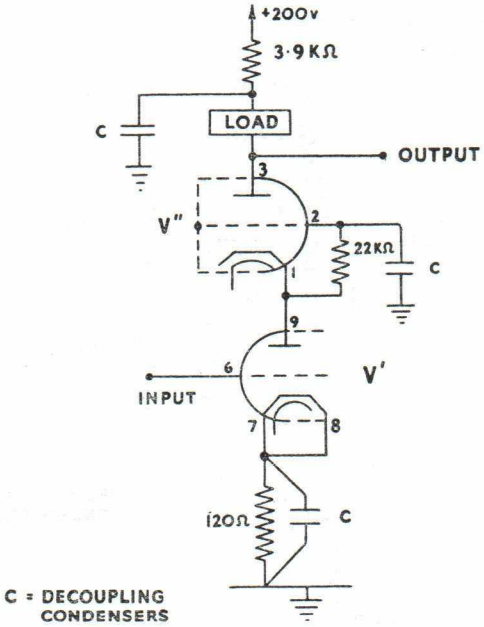

NOTE: Application of bias to section 1 in the Potentiometer Bias arrangement effectively controls both triodes giving this combination a shorter grid base than the Grid Current Bias arrangement.

Indicates a change ←

30L1/PCC84

CASCODE R.F. DOUBLE TRIODE

AVERAGE CHARACTERISTIC CURVES : I_a/V_g

Each Section

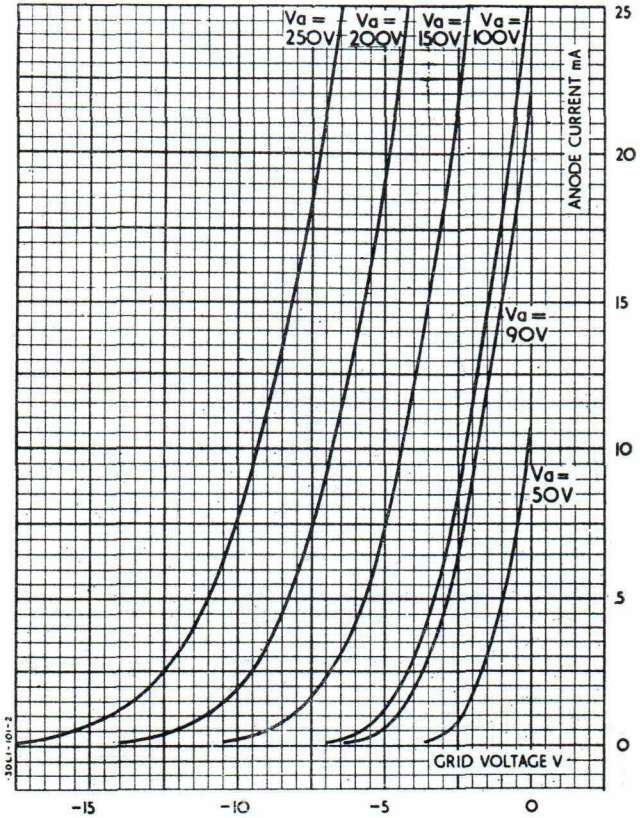

30L1/PCC84 ←

CASCODE R.F. DOUBLE TRIODE

AVERAGE CHARACTERISTIC CURVES : I_a/V_a
Each Section

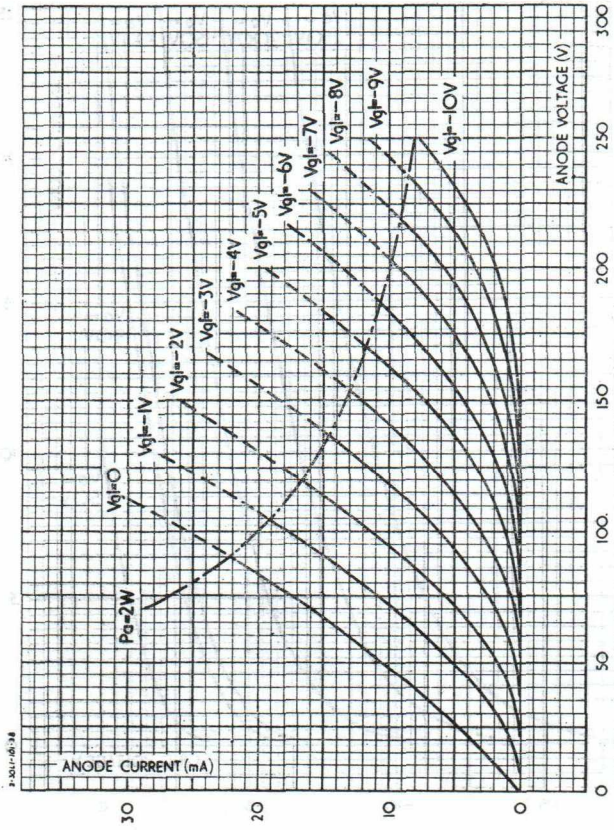

Indicates a change ←

30L1/PCC84

CASCODE R.F. DOUBLE TRIODE

Indirectly heated—for series operation

AVERAGE CHARACTERISTIC CURVES : g_m/V_g

Each Section

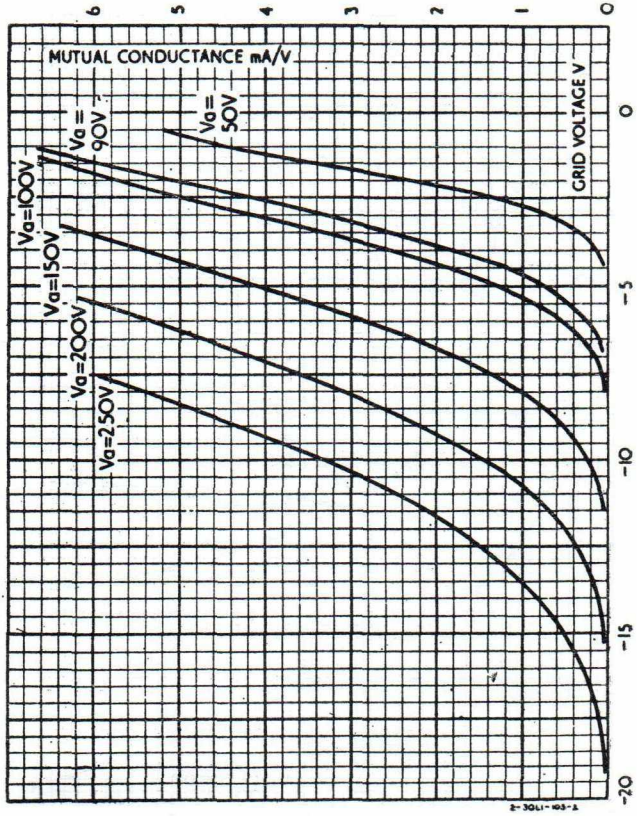

30L1/PCC84

CASCODE R.F. DOUBLE TRIODE

Indirectly heated—for series operation

AVERAGE CHARACTERISTIC CURVES : g_m, μ, r_a, V_g/I_a

Each Section
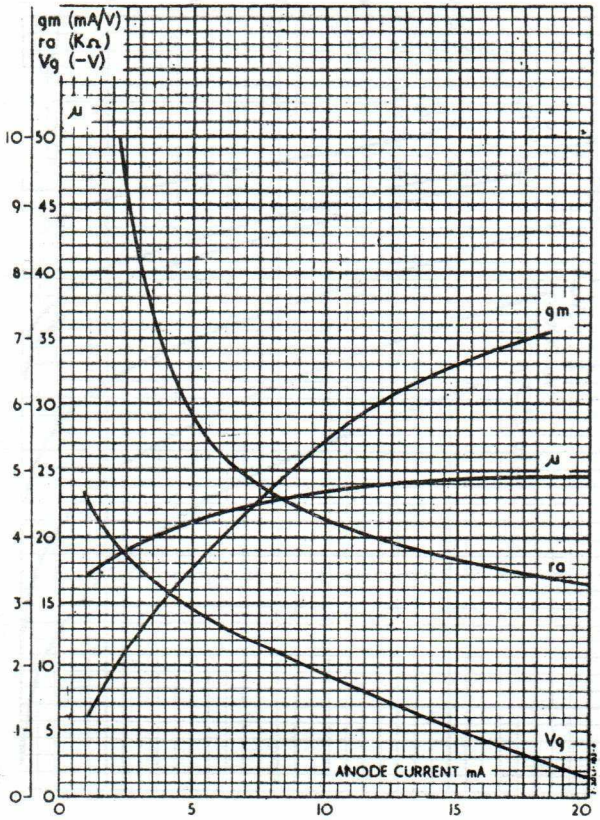
Anode Voltage=90v.