30C9

CATHODE RAY TUBE—ALL ELECTROSTATIC 7" Dia.

Indirectly heated—for measurements

RATING

Heater Voltage (volts)	V_h	4.0
Heater Current (amps)	I_h	0.72
Maximum 1st Anode Voltage (volts)	$V_{a1(max)}$	500
Maximum 2nd Anode Voltage (volts)	$V_{a2(max)}$	1,000
Maximum 3rd Anode Voltage (volts)	$V_{a3(max)}$	4,000
Average Sensitivity of "X" plates (mm/V)		*520/V
Average Sensitivity of "Y" plates (mm/V)		*520/V

* Where "V" denotes the voltage on the 3rd Anode.

All Maximum Ratings are Absolute values not Design Centres.

INTER-ELECTRODE CAPACITANCES

X1 Deflecting Plate/all other electrodes (μμF)	$C_{x1,all}$	14.6
X2 Deflecting Plate/all other electrodes (μμF)	$C_{x2,all}$	14.0
Y1 Deflecting Plate/all other electrodes (μμF)	$C_{y1,all}$	14.9
Y2 Deflecting Plate/all other electrodes (μμF)	$C_{y2,all}$	13.8
X1 Deflecting Plate/X2 Deflecting Plate (μμF)	$C_{x1,x2}$	4.5
Y1 Deflecting Plate/Y2 Deflecting Plate (μμF)	$C_{y1,y2}$	4.4
X1+X2 Deflecting Plates/Y1+Y2 Deflecting Plates (μμF)	$C_{(X1+X2)(Y1+Y2)}$	2.7
Control Grid (Wehnelt)/All other electrodes (μμF)	$C_{g,all}$	8.6

DIMENSIONS

Maximum Overall Length (mm)	495
Maximum Diameter (mm)	175
Nominal Screen Diameter (inches)	7
Approximate Nett Weight (lbs)	2¼
Approximate Packed Weight (lbs)	11¾

NOTES

The 30.C.9 is a precision contructed instrument for applications where the accuracy of the gun contruction employed in compass tubes is required without the provision of scales.

The gun system is capable of providing the high beam currents when pulse modulation of the grid is required.

For general measurement work the 30.C.9/P1 is recommended. This has a screen with a medium persistence green phosphor. For special applications, however, the tube may be supplied with any of the standard phosphors described on the introductory page in this section.

Associated Electrical Industries Limited

Electronic Components Division

Tel.: GERRARD 9797

30C9

CATHODE RAY TUBE—ALL ELECTROSTATIC 7″ Dia.

Indirectly heated—for measurements

TYPICAL OPERATION

3rd Anode Voltage (volts)	V_{a3}	2,200
2nd Anode Voltage-approximate for focus (volts)✓	V_{a2}	440
1st Anode Voltage (volts)	V_{a1}	450
Negative Bias on Control Grid for cut-off of Beam Current (volts)	V_g	30-90

✓ The voltage required on the 2nd Anode for focus decreases with an increase of beam current and the above figure gives the voltage required at low current.

BASE 12 contact Key Base (BS.448)

VIEW OF FREE END

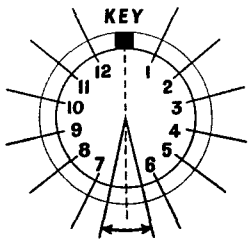

PERMISSIBLE ANGULAR VARIATION OF MOUNTS ± 10°

CONNECTIONS

Pin 1	Control Grid	g
Pin 2	Cathode	k
Pin 3	Heater	h
Pin 4	Heater	h
Pin 5	Anode 1	a1
Pin 6	Anode 2	a2
Pin 7	-	-
Pin 8	Deflecting Plate Y2	Y2
Pin 9	Deflecting Plate Y1	Y1
Pin 10	Anode 3	a3
Pin 11	Deflecting Plate X1	X1
Pin 12	Deflecting Plate X2	X2

Associated Electrical Industries Limited
Electronic Components Division
Tel.: GERRARD 9797

30C9

CATHODE RAY TUBE—ALL ELECTROSTATIC 7″ Dia.

Indirectly heated—for measurements

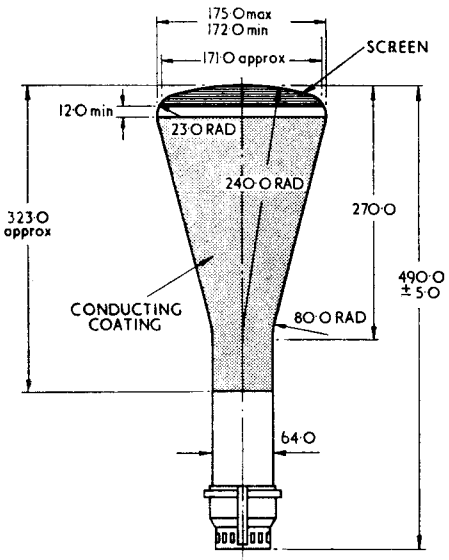

All dimensions in mm.

Associated Electrical Industries Limited
Electronic Components Division
Tel.: GERRARD 9797