Vacuum tube 300B gold is a triode with coated filament in the glass bulb, designed to amplify low frequency power in radio engineering devices.

Pin arrangement

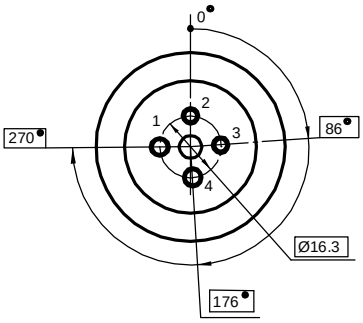

Electrode -to - lead connection diagram

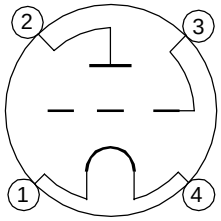

Dimensions

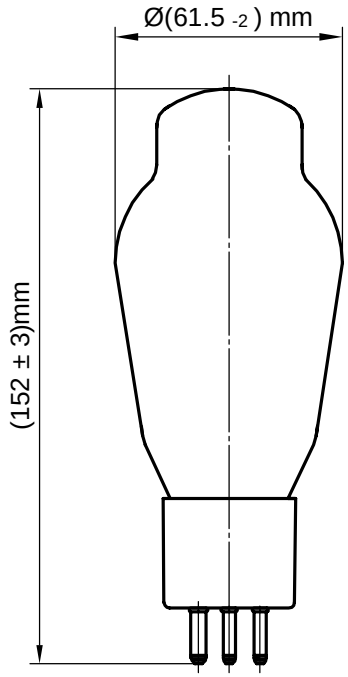

Lead designation	Name of electrode
1, 4	Cathode
2	Plate
3	Grid

Electrical parameters

Parameters, conditions and units	Nominal	
	min	max
Heater current, A	1.1	1.4
Grid reverse current, µA , (at: filament voltage 5.0 V, plate voltage 450 V, grid voltage minus 97 V, resistance in grid circuit 0.51 M Ω)	—	1.0
Plate current, mA, (at: filament voltage 5.0 V, plate voltage 303 V, grid voltage minus 58 V)	50	85
Slope of characteristic, mA/V (at: filament voltage 5.0 V, plate voltage 303 V, grid voltage minus 58 V)	4.5	—
Amplification factor (at: filament voltage 5.0 V, plate voltage 303 V, grid voltage minus 58 V)	3.0	—
Distortion factor, % (at: filament voltage 5.0 V, plate voltage 303 V, grid voltage minus 58 V, plate circuit resistance 2.4 k, grid alternating voltage, efficacious 41 V)	—	10
Output power, W (at: filament voltage 5.0 V, plate voltage 303 V, grid voltage minus 58 V, plate circuit resistance 2.4 kΩ, grid alternating voltage, efficacious 41 V)	5.5	—
Grid blanking voltage, V (at: filament voltage 6.3 V, plate voltage 303 V)	—	120

Limiting Values

Parameters, units	Nominal	
	min	max
Filament voltage, V	4.5	5.5
Plate voltage, V	—	450
Cathode current, mA	—	100
Power dissipation at the plate of each triode, W	—	40
Grid voltage, negative, V	—	220
Grid circuit resistance ,M Ω fixed bias self - bias	 — —	 0.51 1.0
Temperature at the most heated part of the envelope, K°	—	473

300B gold

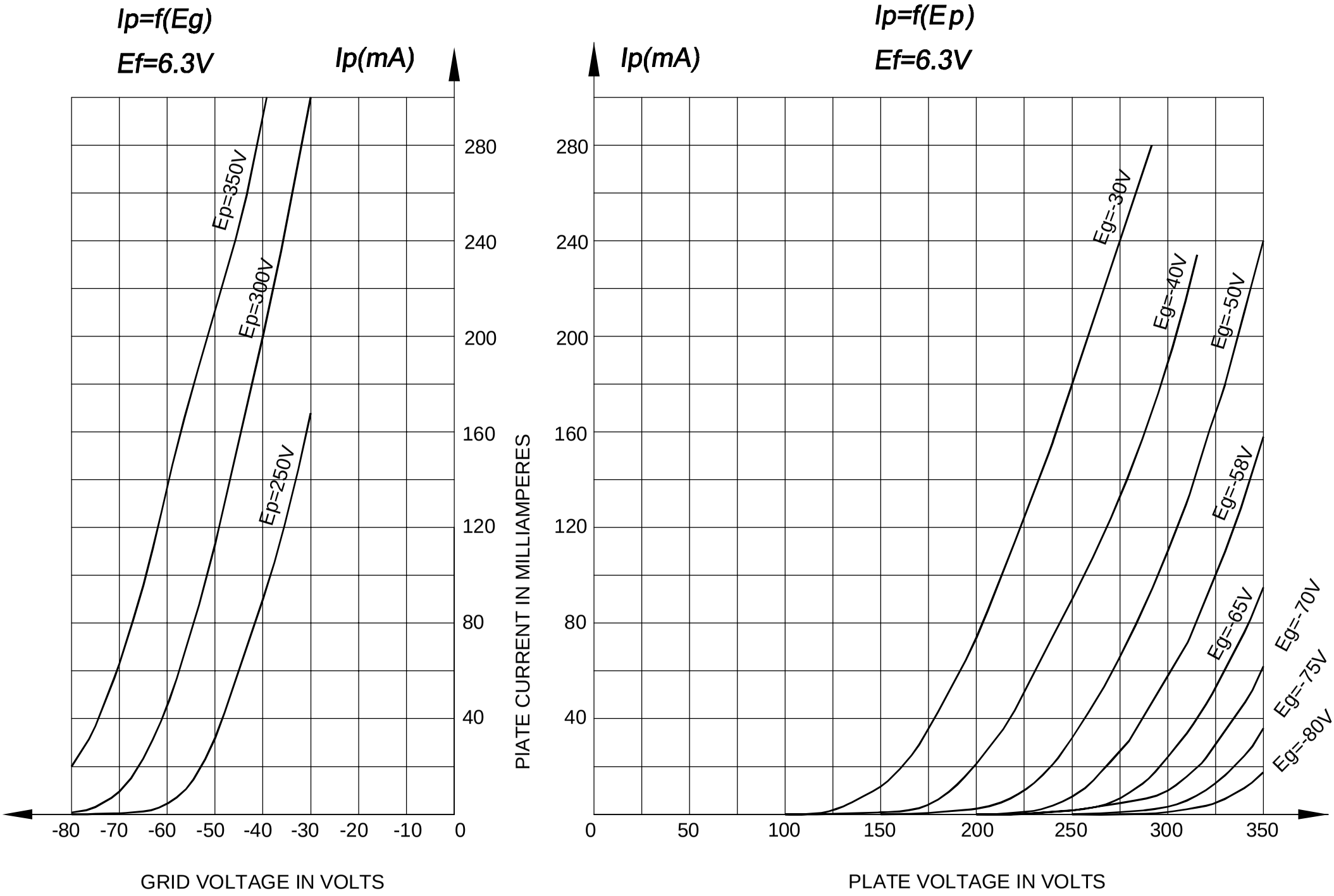
Ip=f(Eg)
Ef=6.3V
Ip(mA)
Ep=350V
Ep=300V
Ep=250V
280
240
200
160
120
80
40
-80 -70 -60 -50 -40 -30 -20 -10 0
GRID VOLTAGE IN VOLTS
PIATE CURRENT IN MILLIAMPERES
Ip=f(Ep)
Ef=6.3V
Ip(mA)
Eg=-30V
Eg=-40V
Eg=-50V
Eg=-58V
Eg=-65V
Eg=-70V
Eg=-75V
Eg=-80V
280
240
200
160
120
80
40
0 50 100 150 200 250 300 350
PLATE VOLTAGE IN VOLTS