TOSHIBA MAGNETRON

2M69

The Toshiba 2M69 is a compact sized low voltage CW magnetron especially intended for use in microwave heating and cooking applications. It provides 1.5 kW of power at the frequency of 2450 MHz. The tube has permanent magnet and is cooled with forced air. Its cathode is a directly heated filament which enables short warm up time. The input side of the tube is covered with a metal shield in order to minimize unwanted radiation and to avoid high voltage hazard. The output is of the probe type in a glass dome and capable of directly driving a rectanglar waveguide or a heating oven.

Features

Short Preheating Time

An improved thoriated tungsten direct heating filament requires only a few seconds of preheating.

No Filament Voltage Reduction Necessary

Power supply can be made simple, no relay is necessary to reduce filament voltage when operating.

Low Anode Voltage

The lowest anode voltage (2.5 kVpeak for 1.5 kW magnetron) enables to use economical transformer and rectifier.

Low Spurious Noise Radiation

As an integrated filter suppresses spurious noise radiation through filament leads, no external filter circuit is necessary for oven.

Stable under the most severe load conditions

Within acceptable VSWR up to 4 at any phase, high power output with good heating uniformity is ensured.

Long Life Expectancy

Selected materials with Toshiba's long experience in vacuum tube production ensures long life expectancy of more than 3000 hours.

12-1970

TOSHIBA MAGNETRON

2M69

GENERAL DATA

Electrical :

Frequency	2450 ± 30	MHz
Filament voltage	5	V
Filament current	20	A
Cathode preheating time	5	sec.

Mechanical :

Physical dimensions	See outline drawing
Base and electrical connection	See outline drawing
Mounting position	Vertical
RF coupling	Probe
Magnetic field	Integral
Cooling	Forced air cooling
Net weight	2.7 kg approx.
Type of cathode	Thoriated tungsten direct heating

MAXIMUM RATINGS

	Minimum	Maximnm	
Filament voltage (preheat)	4.7	5.3	V
Cathode preheating time	5	—	sec.
Peak anode voltage	—	2.75	kV
Average anode current	—	1100	mAdc
Peak anode current	—	3	A
Anode power input	—	2.8	kW
Load VSWR	—	4	
Anode temperature (See outline drawing measuring point)	—	150	°C

TYPICAL OPERATION

Unsmoothed fullwave rectified current

Frequency	2450	MHz
Filament voltage (operation)	5	V
Peak anode voltage (Note 1)	2.5	kV
Average anode current	1000	mAdc
Power output (matched load) (Note 2)	1500	W
Cooling quantity anode (forced air)	2500	l/min.

Note 1 Anode power supply is single phase full wave rectified D.C. without filter.
Note 2 Power output for typical microwave oven is expected about 85 percent of the power output at matched load.

TOSHIBA MAGNETRON

2M69

COOLING CHARACTERISTICS

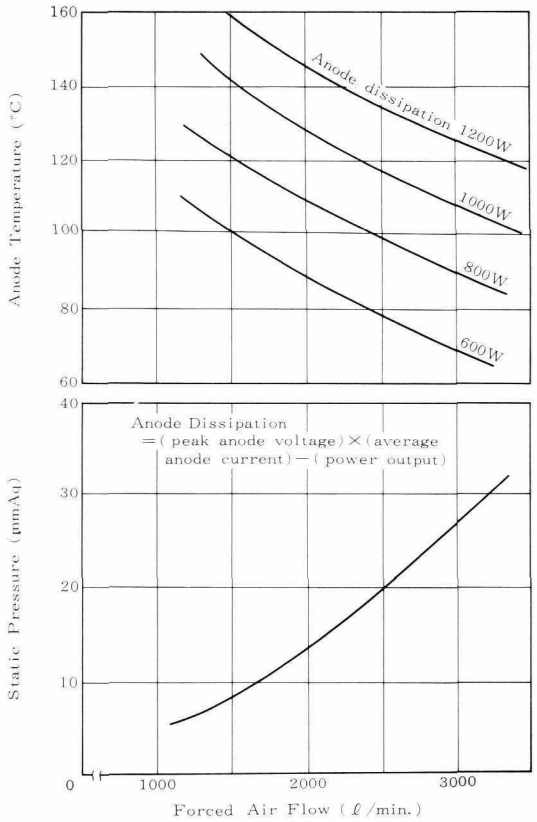

RIEKE DIAGRAM

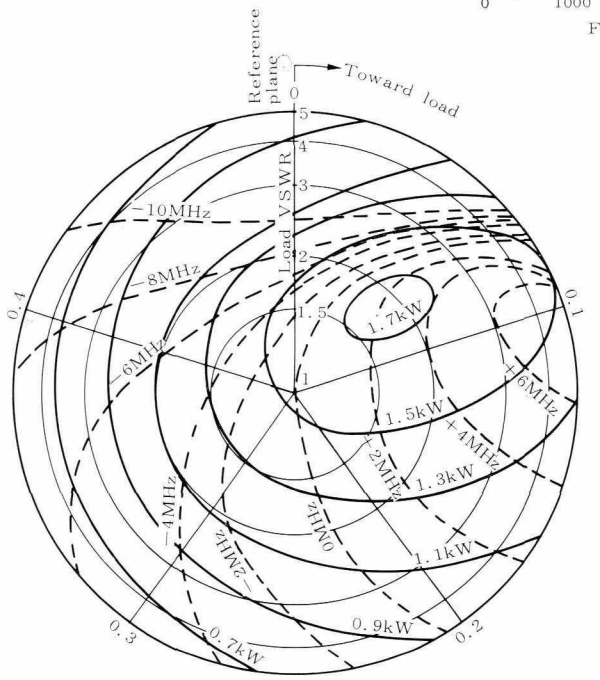

Operating Condition
Anode supply : Single phase unsmoothed full wave rectified
Average anode current : 1.0A
Phase reference plane : Antenna

PERFORMANCE CHART

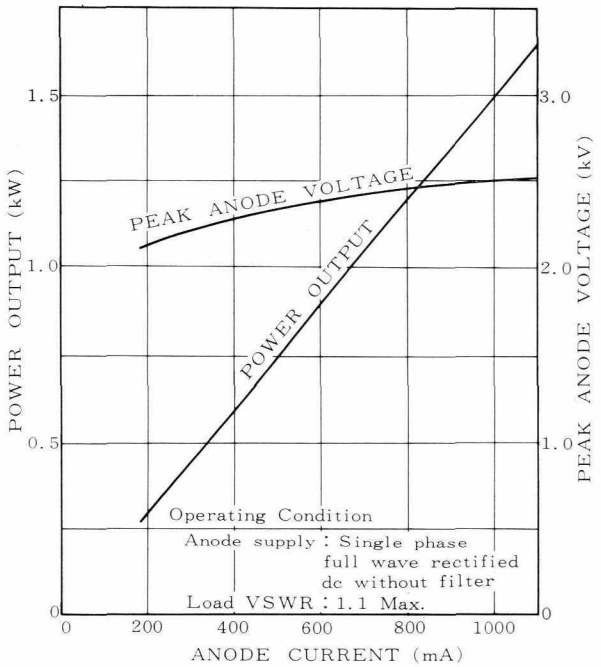

TOSHIBA MAGNETRON

2M69

OUTLINE DIMENTIONS

Unit mm

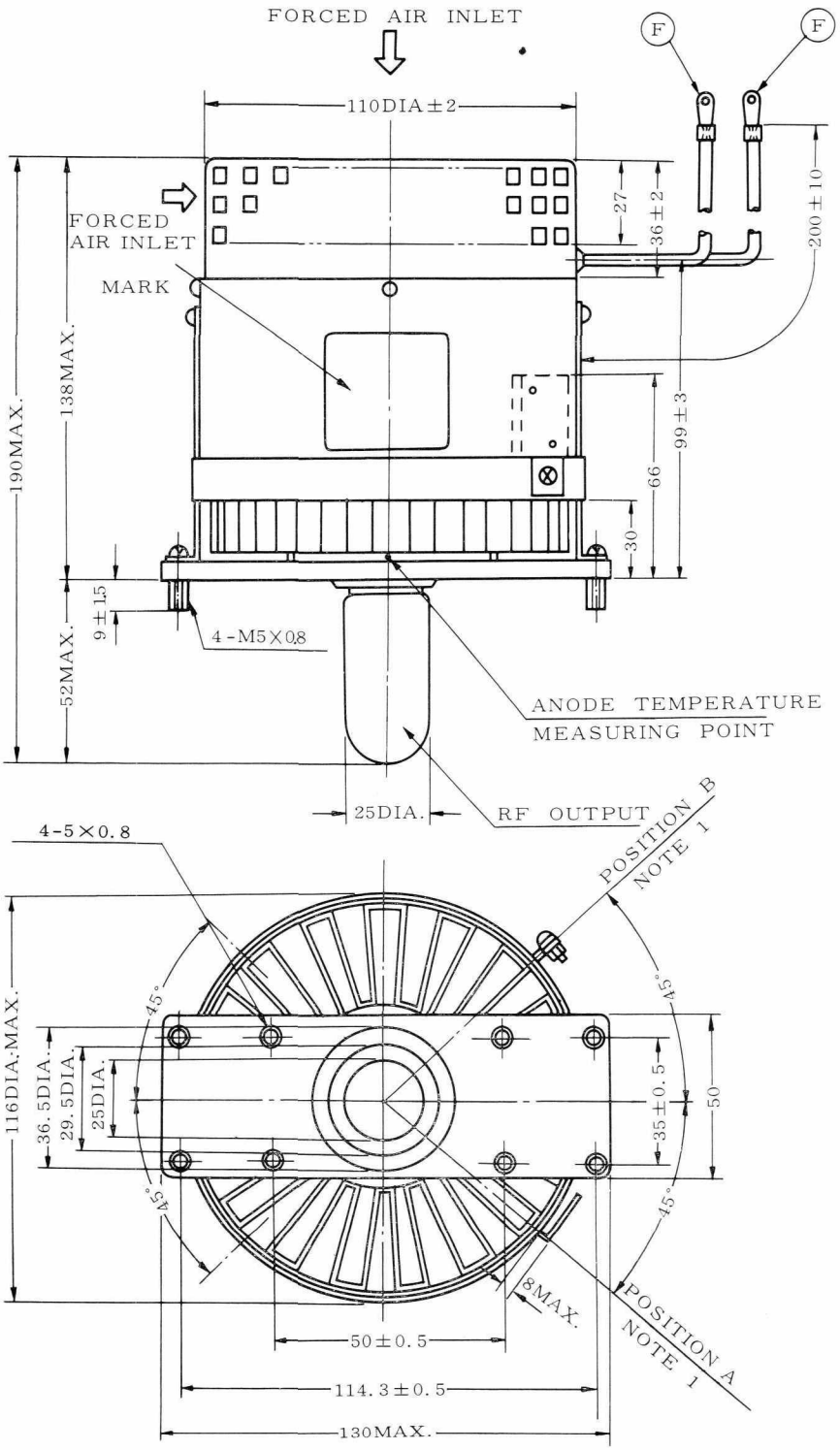

FILAMENT TERMINAL DETAIL

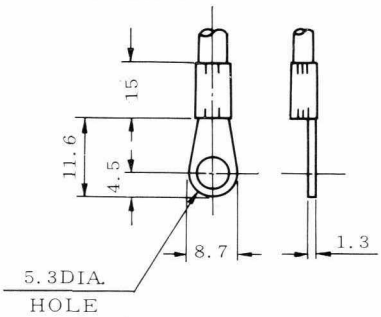

THERMOSWITCH MOUNTING TAB

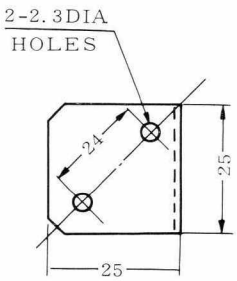

Note 1. Specify thermoswitch mounting position "A" or "B" as 2M69(A) or 2M69(B) respectively.

TOKYO SHIBAURA ELECTRIC CO., LTD.

Printed in Japan

Consumer Products Export Division 2-1, 5 chome, Ginza, Chuo-ku, Tokyo