TOSHIBA MAGNETRON

2M53

The Toshiba 2M53 is a fixed frequency continuous wave magnetron intended for use in microwave heating and cooking appliances. The average power output is 800 watts in the frequency range from 2420 MHz to 2480 MHz. This tube is an integral magnet type and requires forced air cooling. The output is fed either into a rectangular wave guide or into a heating oven directly.
In order to minimize the unwanted radiation and to avoid the high voltage danger, the input part of the tube is covered with a metal shield case.

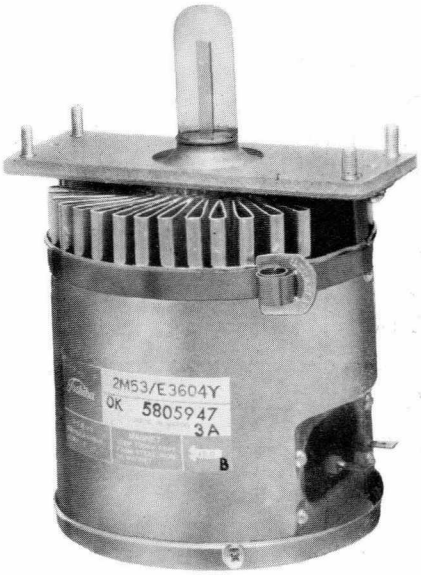

Features

Short Preheating Time

An improved thoriated tungsten direct heating filament requires only a few seconds of preheating.

No Filament Voltage Reduction Necessary

Power supply can be made simple, no relay is necessary to reduce filament voltage when operating.

Low Spurious Noise Radiation

As an integrated filter suppresses spurious noise radiation through filament leads, no external filter circuit is necessary for oven.

Stable under the most severe load conditions

Within acceptable VSWR up to 4 at any phase, high power output with good heating uniformity is ensured.

Long Life Expectancy

Selected materials with Toshiba's long experience in vacuum tube production ensures long life expectancy of more than 3000 hours.

12-1970

TOSHIBA MAGNETRON

2M53

GENERAL DATA

Electrical :

Frequency	2450 ± 30	MHz
Filament voltage	3.15	V
Filament current	13	A
Cathode preheating time	8	sec.
Cold heater resistance	0.03	Ω

Mechanical :

Physical dimensions	See outline drawing
Base and electrical connection	See outline drawing
Mounting position	Any
RF coupling	See attached drawing
Magnetic field	Integral
Cooling	Forced air
Net weight	2.0 kg approx.
Type of cathode	Thoriated tungsten direct heating

MAXIMUM RATINGS

	Minimum	Maximnm	
Filament voltage (preheat)	3.0	3.3	V
Cathode preheating time	5	—	sec.
Peak anode voltage	—	4.5	kV
Average anode current	—	350	mAdc
Anode power input	—	1400	W
Load VSWR	—	4	
Anode remperature (See outline drawing measuring point)	—	150	°C

TYPICAL OPERATION

Unsmoothed fullwave rectified current

Frequency	2450	MHz
Filament voltage (operation)	3.15	V
Peak anode voltage (Note 1)	4	kV
Average anode current	300	mA
Power output (matched load) (Note 2)	800	W
Magnetic field intensity	PKG	
Cooling quantity anode (forced air)	1500	l/min.

Note 1 Anode power supply is single phase full wave rectified without filter.
Note 2 Power output for typical microwave oven is expected about 85 percent of the power output at matched load.

TOSHIBA MAGNETRON

2M53

COOLING CHARACTERISTICS

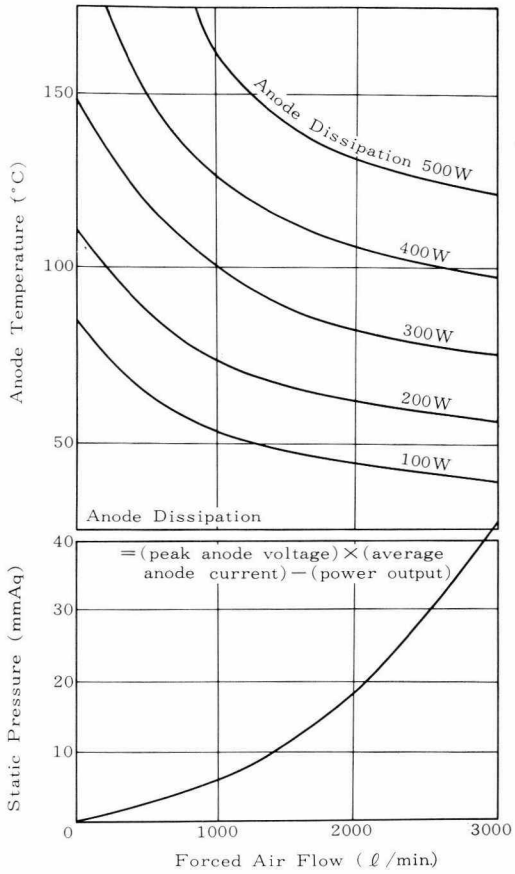

RLEKE DIAGRAM

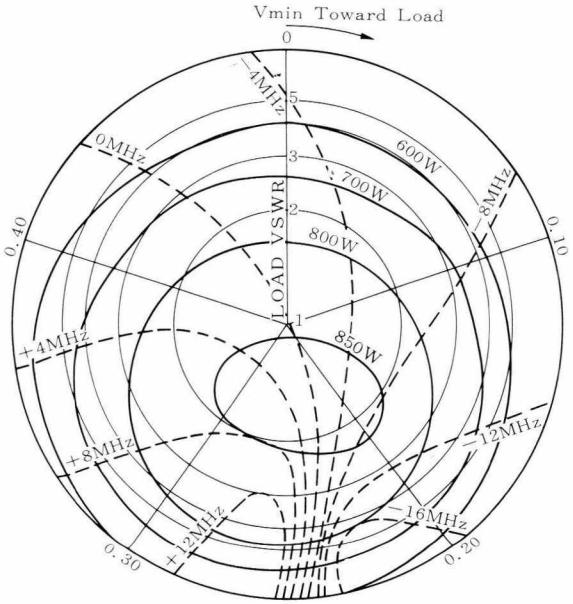

PERFORMANCE CHART

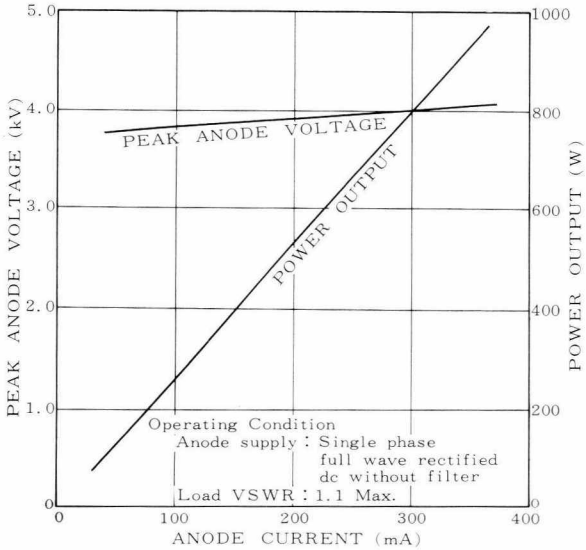

Operating Conditions
Anode Supply : Unsmoothed Fullwave Rectified
Average Anode Current : 300mAdc
Phase Reference Plane : Antenna

TOSHIBA MAGNETRON

2M53

OUTLINE DIMENTIONS

Unit mm

2M53/E3604Y

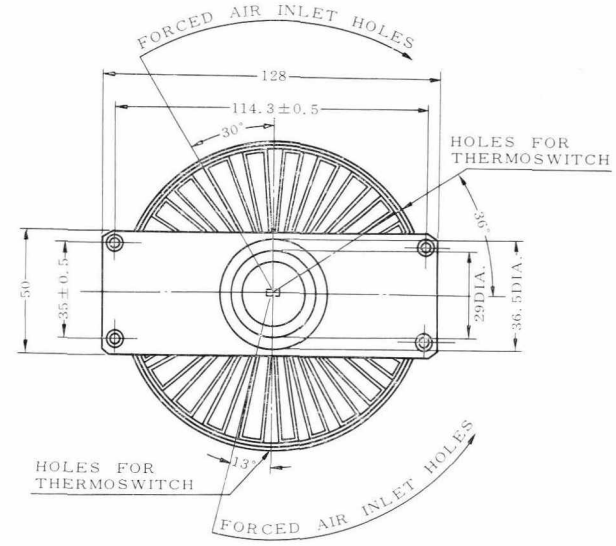

2M53/E3604

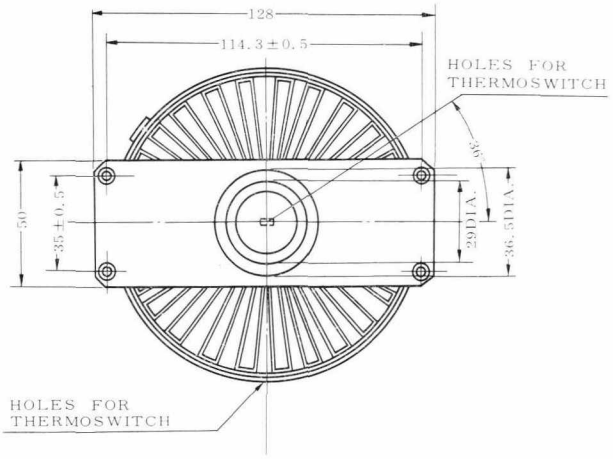

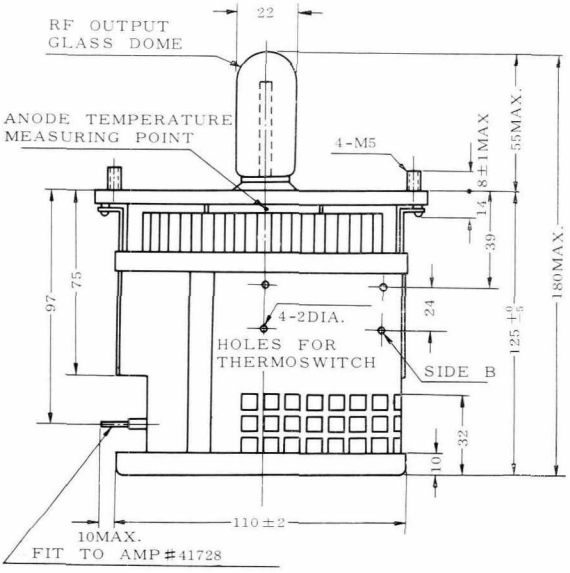

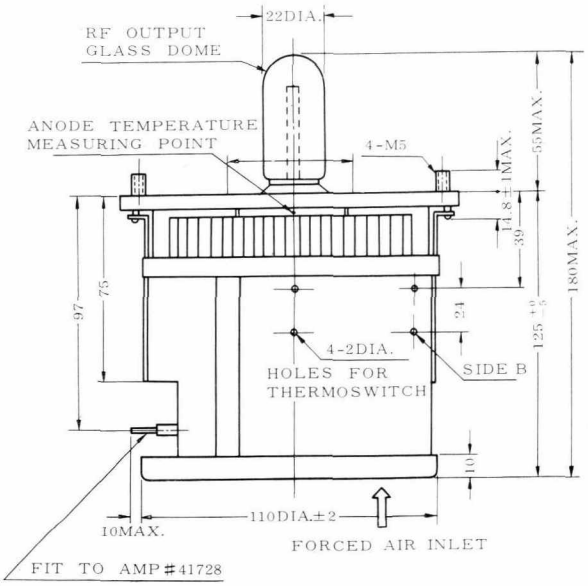

TOKYO SHIBAURA ELECTRIC CO., LTD.

Printed in Japan

Consumer Products Export Division 2-1, 5 chome, Ginza, Chuo-ku, Tokyo