Security Classification: Confidential

# Type 2J58 - Tunable Magnetron

## General Characteristics

### Electrical

| | |
|---|---|
| Cathode | Coated Unipotential |
| Filament voltage | 6.3 volts |
| Filament current | 1.5 amps |
| Frequency range | 2965-3019 Mc. |
| Magnetic Field Strength | 1450 gauss |
| Peak anode voltage | 10,500 volts |
| Power output at .002 duty cycle and 12.5 peak amperes | 60 watts |

### Mechanical

| | |
|---|---|
| Maximum Dimensions | - see outline drawing |
| Base Connections | - see outline drawing |
| Mounting position | - any |

### Maximum Ratings

| | |
|---|---|
| Duty Cycle* | .002 |
| Peak Anode Voltage | 14,000 volts |
| Peak Anode Current | 15 amps |
| Anode Dissipation | 200 watts |
| Anode Temperature | 100 C degrees |

* In any 100 microsecond interval, the tube shall not be operated longer than 5 microseconds.

Sponsor: Raytheon Manufacturing Company - Power Tube Division

from RMA release # 456, Nov. 23, 1945

# TECHNICAL INFORMATION
# TUNABLE MAGNETRON OSCILLATOR

## OUTLINE DRAWING

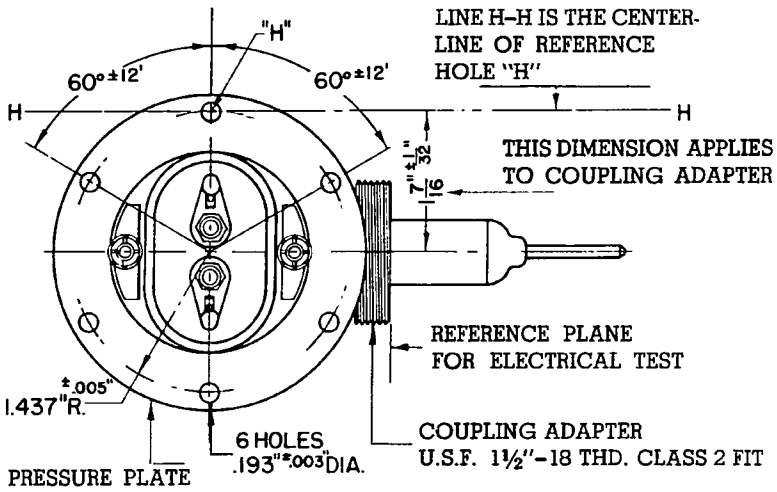


TUNING GEAR IS ASSEMBLED WITH STOP DEVICE TO PERMIT TWO TURNS (700 DEGREES) FOR TUNING

SOLDERED JOINTS IN THE PRESSURE PLATE ARE VACUUM TIGHT SO THAT IT MAY BE USED TO PROVIDE A HERMETIC SEAL. ALL POINTS ON REFERENCE SURFACE ARE FLAT TO WITHIN .010" FOR ½" IN FROM OUTER EDGE.

COMMON HEATER-CATHODE CONNECTION INDICATED BY LETTER "C"
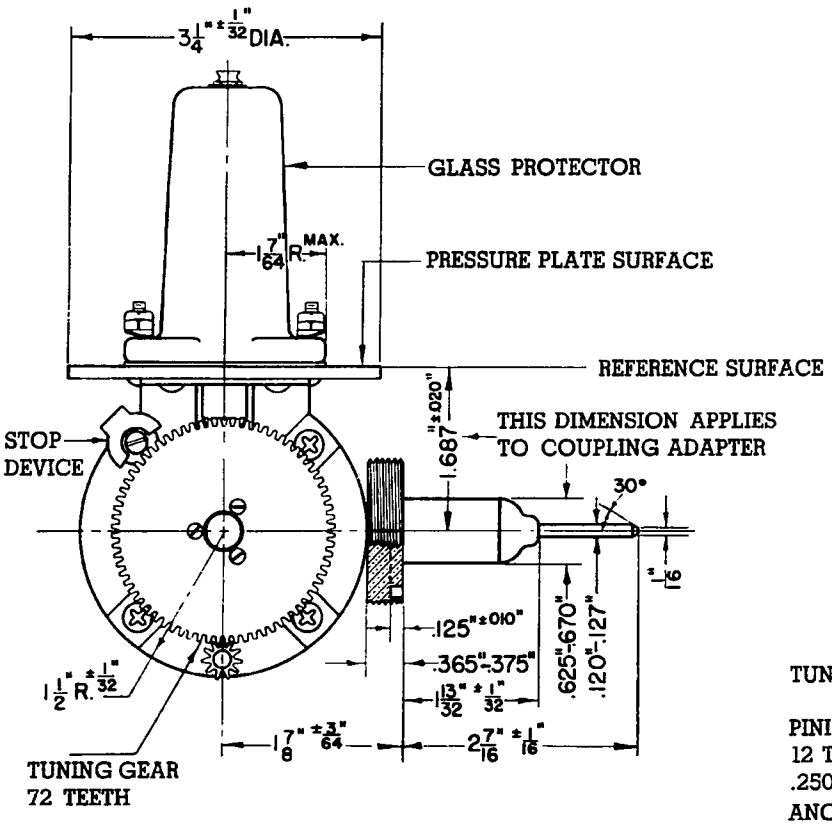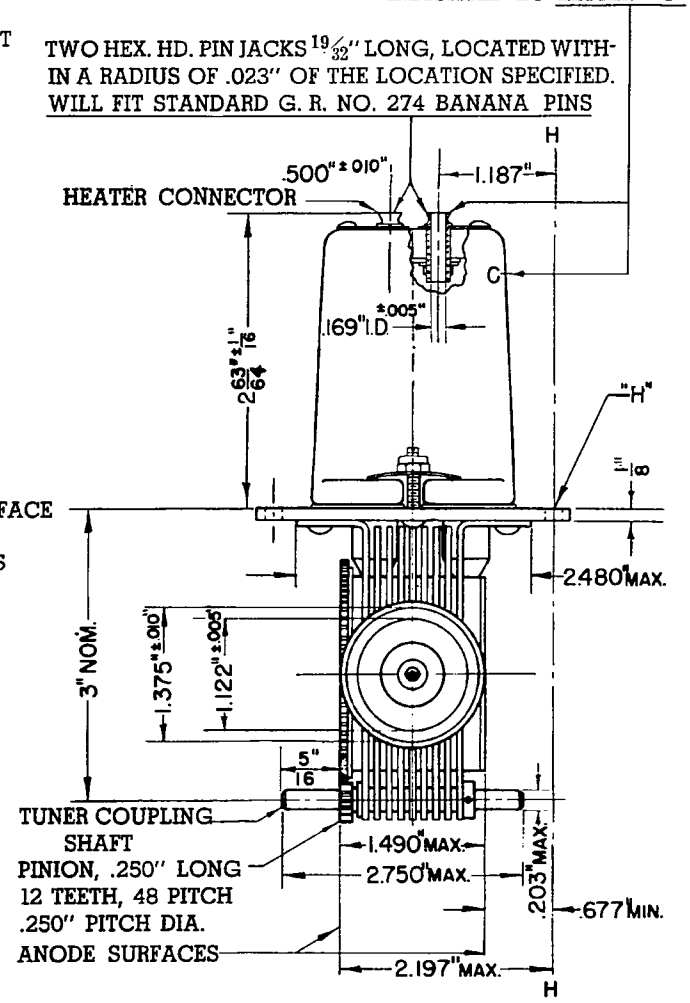
TWO HEX. HD. PIN JACKS 19/32" LONG, LOCATED WITHIN A RADIUS OF .023" OF THE LOCATION SPECIFIED. WILL FIT STANDARD G. R. NO. 274 BANANA PINS