Security Classification: Confidential

Type 2J33
MAGNETRON

GENERAL CHARACTERISTICS

Electrical

Cathode	Coated Unipotential
Filament voltage	6.3 volts
Filament current	1.5 amps
Frequency	2760 ± 20 Mc
Field Strength	1900 gauss
Peak Anode Voltage	20,000 volts
Power output at 30 amperes .001 duty cycle	240 watts

Mechanical

Maximum Dimensions - see outline drawing
Base Connections - see outline drawing
Mounting Position - any

Maximum Ratings (Peak values for duty cycle specified)

Duty Cycle *	.002
Anode voltage	22,000 volts
Anode current	30 amps
Anode Dissipation	350 watts

* In any 100 microsecond interval the tube shall not be operated more than 5 microseconds.

Sponsor: Raytheon Manufacturing Company - Power Tube Division

From RMA release # 366, May 20, 1944

TECHNICAL INFORMATION
MAGNETRON OSCILLATOR

OUTLINE DRAWING

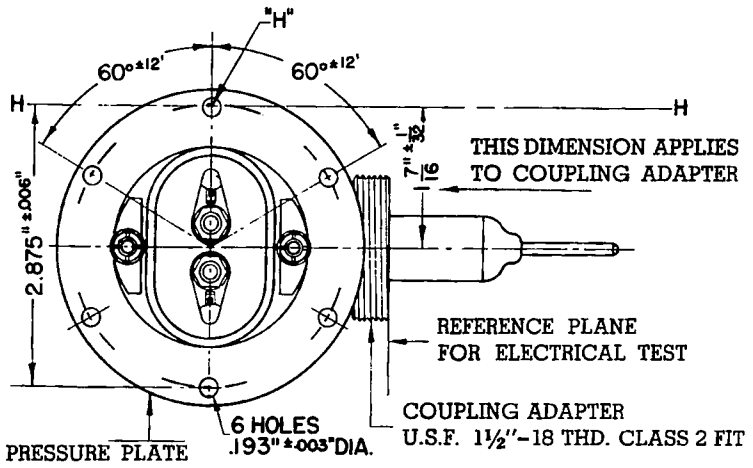

LINE H-H IS THE CENTERLINE OF REFERENCE HOLE "H."

SOLDERED JOINTS IN THE PRESSURE PLATE ARE VACUUM TIGHT SO THAT IT MAY BE USED TO PROVIDE A HERMETIC SEAL. ALL POINTS ON REFERENCE SURFACE ARE FLAT TO WITHIN .010" FOR ½" IN FROM OUTER EDGE.

COMMON HEATER-CATHODE CONNECTION INDICATED BY LETTER "C"
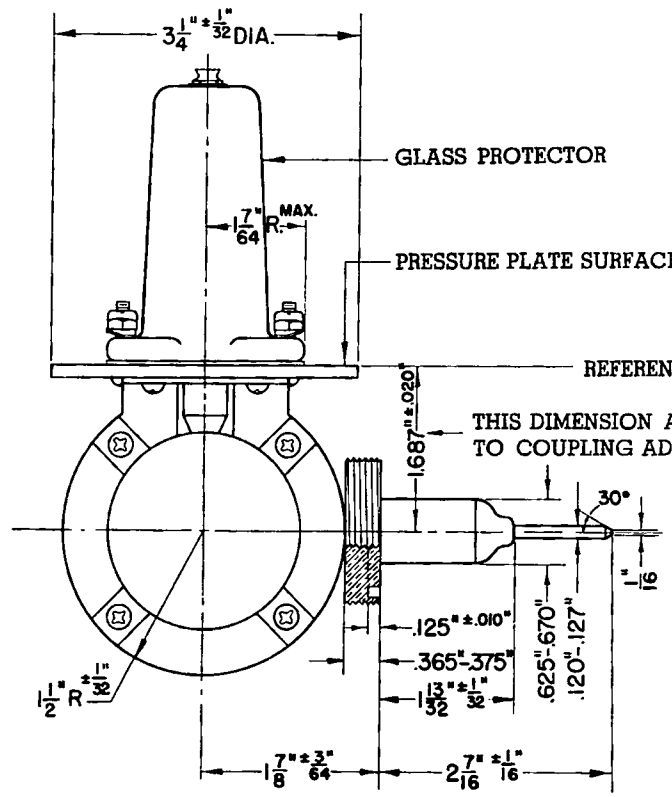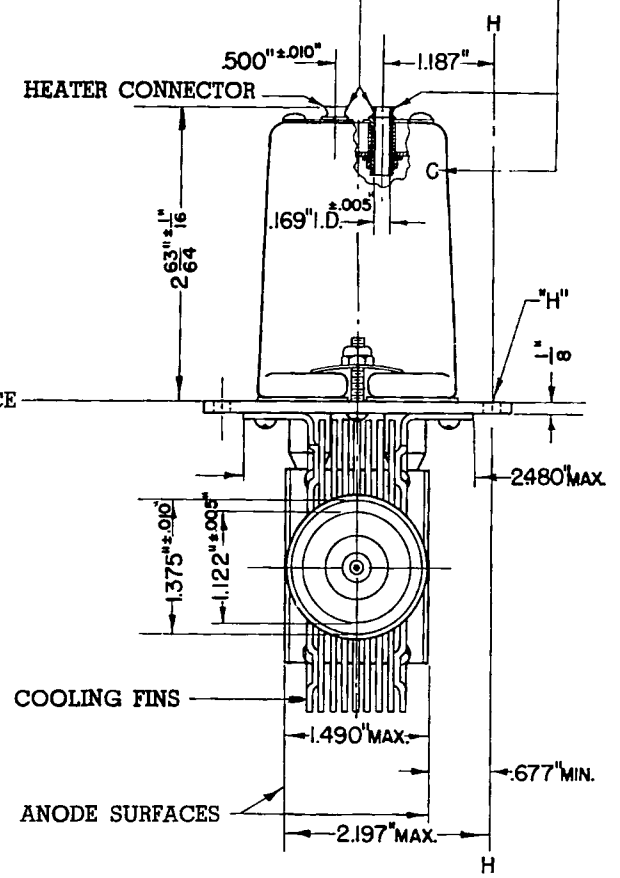
TWO HEX. HD. PIN JACKS 19/32" LONG, LOCATED WITHIN A RADIUS OF .023" OF THE LOCATION SPECIFIED. WILL FIT STANDARD G. R. NO. 274 BANANA PINS