EITEL-McCULLOUGH, INC.
SAN BRUNO · CALIFORNIA

TENTATIVE DATA

2C39WA

HIGH-MU UHF TRIODE

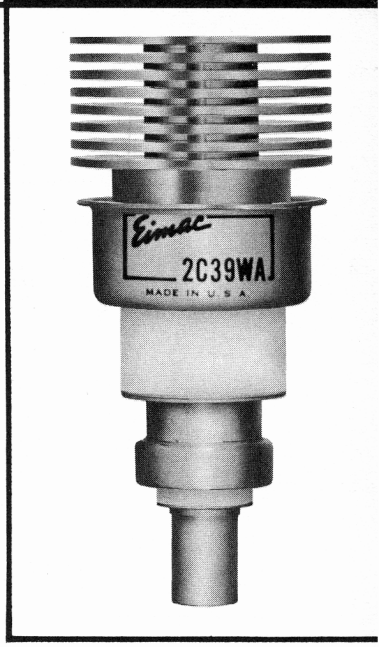

The Eimac 2C39WA is a planar triode of ceramic and metal construction designed for use as an oscillator, frequency multiplier, or power amplifier in the VHF and UHF ranges and particularly suitable for use in grid-isolation circuits. The Eimac 2C39WA is manufactured and tested to exacting tolerances to insure consistent and uniform tube performance.

CHARACTERISTICS

ELECTRICAL

	Min.	Nom.	Max.	
Cathode: Oxide-Coated, Unipotential				
Heating Time	-	-	60	seconds
Heater: Voltage	-	-	5.8	volts
Current (E_f=5.8v)	0.87		1.03	ampere
Amplification Factor	-	-	100	
Transconductance (E_f=5.5v, E_b=600v, R_k=30ohms)	18,000		30,000	umhos
Frequency for Maximum Ratings	-	-	2500	mc

Interelectrode Capacitances (In Shielded Fixture):

	Min.	Max.	
Grid-Cathode	5.6	7.6	uuf
Grid-Plate	1.86	2.16	uuf
Plate-Cathode		0.035	uuf

MECHANICAL

Terminals	Graduated cylindrical surfaces
Maximum Seal and Anode Core Temperature	200° C
Cooling	Forced air
Operating Position	Any
Maximum Over-All Dimensions:	
Length	2.75 inches
Diameter	1.27 inches
Net Weight	2.5 ounces
Shipping Weight (Approximate)	7 ounces

MAXIMUM RATINGS Class-C oscillator, multiplier, or amplifier.

(Carrier or key-down conditions)	(Plate Mod)	(Teleg. or FM)
D-C PLATE VOLTAGE	600	1000 MAX. VOLTS
D-C CATHODE CURRENT	100	125 MAX. MA
D-C GRID VOLTAGE	-150	-150 MAX. VOLTS
D-C GRID CURRENT	50	50 MAX. MA
INSTANTANEOUS PEAK POSITIVE GRID VOLTAGE	30	30 MAX. VOLTS
INSTANTANEOUS PEAK NEGATIVE GRID VOLTAGE	400	400 MAX. VOLTS
PLATE DISSIPATION (WITH 12.5 CFM AIR FLOW)	70	100 MAX. WATTS
GRID DISSIPATION	2	2 MAX. WATTS

(Effective 2-7-58) Copyright 1958 by Eitel-McCullough, Inc.

DIMENSION DATA		
REF	MIN.	MAX.
B	1.805	1.875
D	.736	.826
E		1.534
G	.140	
H		1.000
I	1.289	1.329
J	.459	.479
K	.125	
L		1.475
M	1.234	1.266
N	.031	
P	1.175	1.199
Q	.031	
R	1.021	1.039
S		.813
T	.652	.668
U	.213	.223
V		.094
X	.016	
Y	.312	.328
AC	.750	
AD	.125	
AG	1.719	
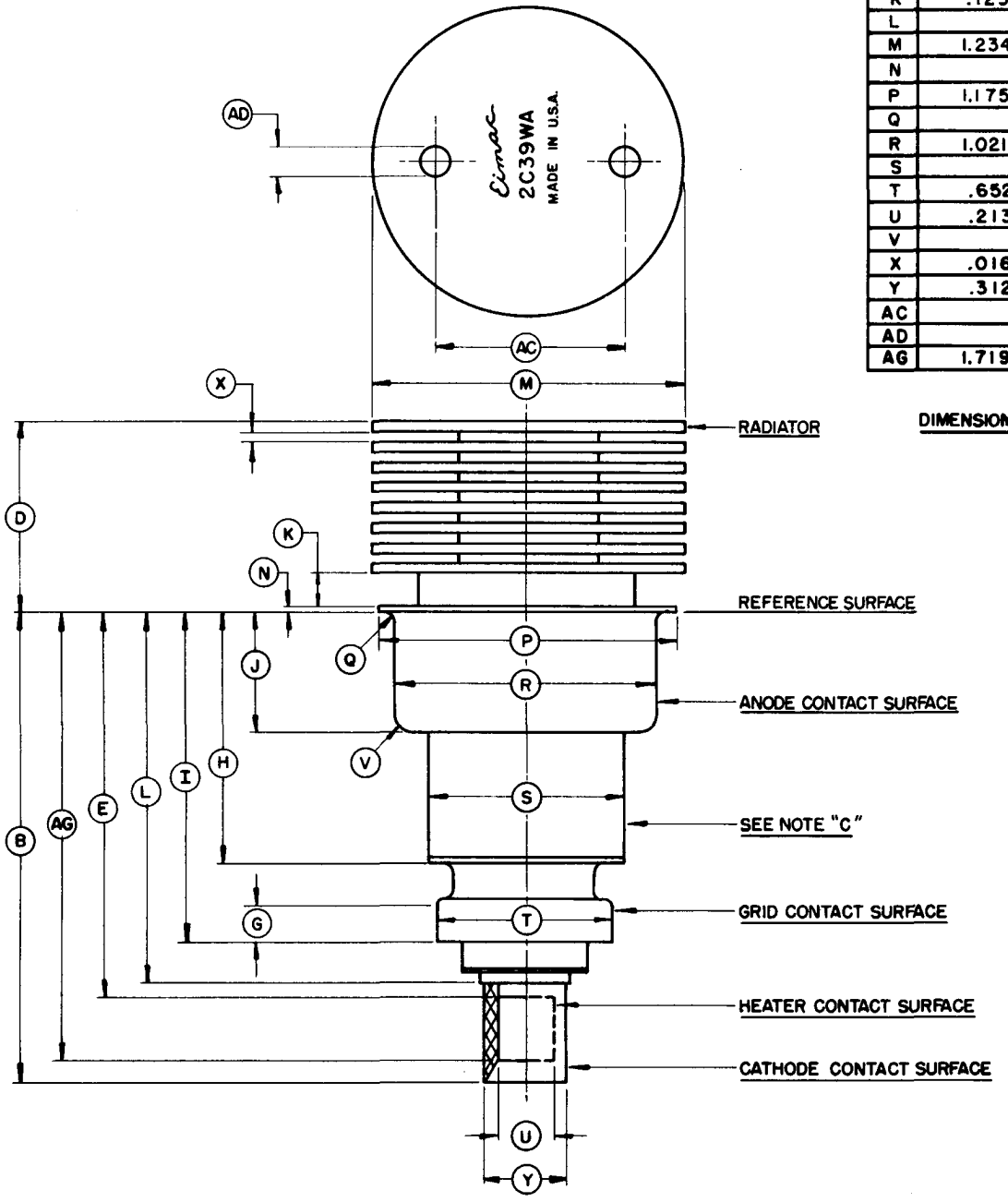
DIMENSIONS IN INCHES