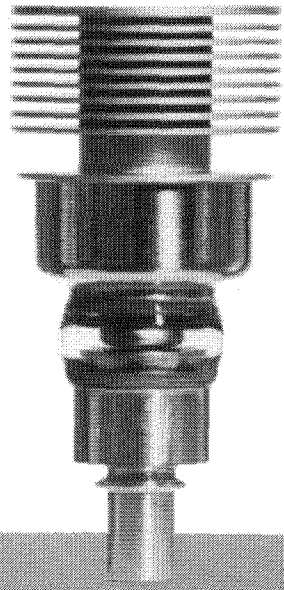

ML-2C39A

General purpose application.

DESCRIPTION

The **ML-2C39A** is a high-mu triode of the planar-electrode type designed specifically for use as an oscillator, frequency multiplier, or power amplifier in radio transmitting service from low frequency to above 2500 Mc. Features include low interelectrode capacitances, high transconductance, and high plate dissipation. Lead inductances and r.f. losses are minimized by a compact, rugged construction with ring type seals, making the tube ideally suited to cavity type circuits as well as for parallel line operation. The cathode is an indirectly-heated, oxide-coated disc. The anode is forced-air cooled and is capable of dissipating 100 watts.

The **ML-2C39A** embodies the highest standards of this tube type. All parts are thoroughly processed by special Machlett techniques to assure efficient operation and long life.

GENERAL CHARACTERISTICS

Electrical		
Heater Voltage	6.3	Volts†
Heater Current at 6.3 Volts	1.0	Amps
Heater Heating Time, minimum (Before Applying Plate Voltage)	60	Seconds
Amplification Factor	100	
Transconductance		
(I_b = 70 mA, E_b = 600 v)	24,000	umhos
Interelectrode Capacitances		
Grid-Plate	2.0	uuf
Grid-Cathode	6.60	uuf
Plate-Cathode, maximum	0.035	uuf
Mechanical		
Mounting Position	Optional	
Type of Cooling	Forced Air*	
Maximum Incoming Air Temperature	45	°C
Required Air Flow on Anode	12.5	cfm*
Maximum Anode Temperature	175	°C
Net Weight	2	oz.

†See Application Note, page 16, for optimum heater voltage.

*See Application Notes, page 16 and also air cooling curves, page 83.

MAXIMUM RATINGS AND TYPICAL OPERATING CONDITIONS

R-F Power Amplifier and Oscillator

Key-down conditions per tube without amplitude modulation‡

Maximum Ratings, Absolute Values

D-C Plate Voltage	1000	volts
D-C Grid Voltage	-150	volts
D-C Cathode Current	125	mA
D-C Grid Current§	50	mA
Peak Positive RF Grid Voltage	30	volts
Peak Negative RF Grid Voltage	-400	volts
Plate Dissipation† (Forced-air Cooling)	100	watts
Grid Dissipation	2	watts

Typical Operation

Power Amplifier, Grid Separation Circuit — 500 Mc

D-C Plate Voltage	900	volts
D-C Grid Voltage	-40	volts
D-C Cathode Current	115	mA
D-C Plate Current	90	mA
D-C Grid Current, Approximate	30	mA
Plate Input	64	watts
Driving Power, Approximate	6	watts
Useful Power Output	40	watts

RF Oscillator — 2500 Mc

D-C Plate Voltage	900	volts
D-C Grid Voltage (from grid-bias resistor) (approx.)	-22	volts
D-C Plate Current	90	mA
D-C Grid Current	27	mA
Useful Power Output	17	watts

Note: These conditions are for a grid-blocking oscillator and conform to the minimum power output requirements as specified in such a test by the MIL-E-1 specification for 2C39A tubes.

Plate Modulated R-F Power Amplifier Class C Telephony

Carrier conditions per tube for use with a maximum modulation factor of 1.0.

Maximum Ratings, Absolute Values

D-C Plate Voltage*	600	volts
D-C Grid Voltage	-150	volts
D-C Cathode Current	100	mA
D-C Grid Current§	50	mA
Peak Positive RF Grid Voltage	30	volts
Peak Negative RF Grid Voltage	-400	volts
Plate Dissipation† (Forced-air Cooling)	70	watts
Grid Dissipation	2	watts

Characteristic Range Values for Equipment Design

	Min.	Max.	
Filament Current at 6.3 volts (Note 1)	0.95	1.1	A
Plate Current (Note 2)	60	95	mAdc
Cut-off bias (Note 3)	——	-15	volts
Transconductance	20000	30000	umhos
Grid-Plate Capacitance	1.86	2.16	uuf
Grid-Cathode Capacitance (Note 4)	5.60	7.60	uuf
Plate tuning range (Note 5)	1960	2030	Mc

Note 1 — For reduced filament voltage see filament volt-ampere characteristics on page 3.

Note 2 — Measured at a plate voltage of 600 volts and a cathode-bias resistor of 30 ohms.

Note 3 — Measured at 1 mA of plate current and a plate voltage of 600 volts.

Note 4 — Capacitance measurements are with the tube cold. When the filament is heated to proper operating temperature, the grid to cathode capacitance will increase by about 1 uuf, due to thermal expansion of the cathode.

Note 5 — With a plate-grid coaxial cavity of fixed dimensions, all tubes will resonate within the specified frequency range.

‡Modulation essentially negative may be used if the positive peak of the envelope does not exceed 115 per cent of the carrier conditions.

§See Application Notes on Determination of Proper Grid Drive.

†Up to 100 watts plate dissipation allowable with forced air sufficient to limit seal temperatures to 175°C. Recommended air flow is 12.5 cubic feet per minute with cowling.

*For modulation factors less than 1.0, a higher d-c plate voltage may be used if the sum of the peak audio voltage and the d-c plate voltage does not exceed 1200 volts.

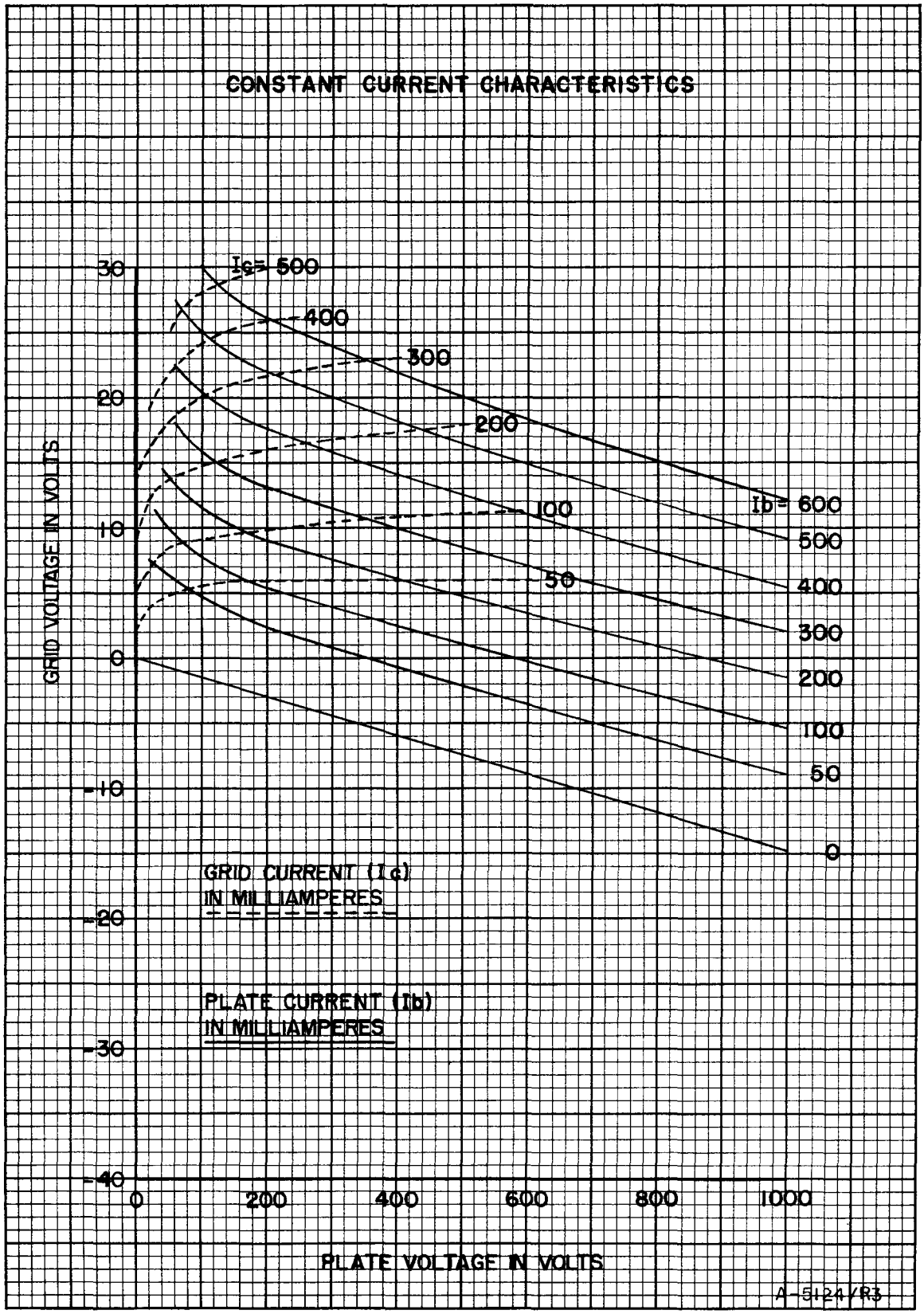
CONSTANT CURRENT CHARACTERISTICS
Ic= 500
400
300
200
100
50
Ib= 600
500
400
300
200
100
50
0
30
20
10
0
-10
-20
-30
-40
GRID VOLTAGE IN VOLTS
GRID CURRENT (Ic)
IN MILLIAMPERES
PLATE CURRENT (Ib)
IN MILLIAMPERES
0
200
400
600
800
1000
PLATE VOLTAGE IN VOLTS
A-5124/R3

DIMENSIONS A ML-2C39A, ML-2C39WA, ML-2C41, ML-322, ML-7209, and ML-7210

DIMENSIONS B ML-322

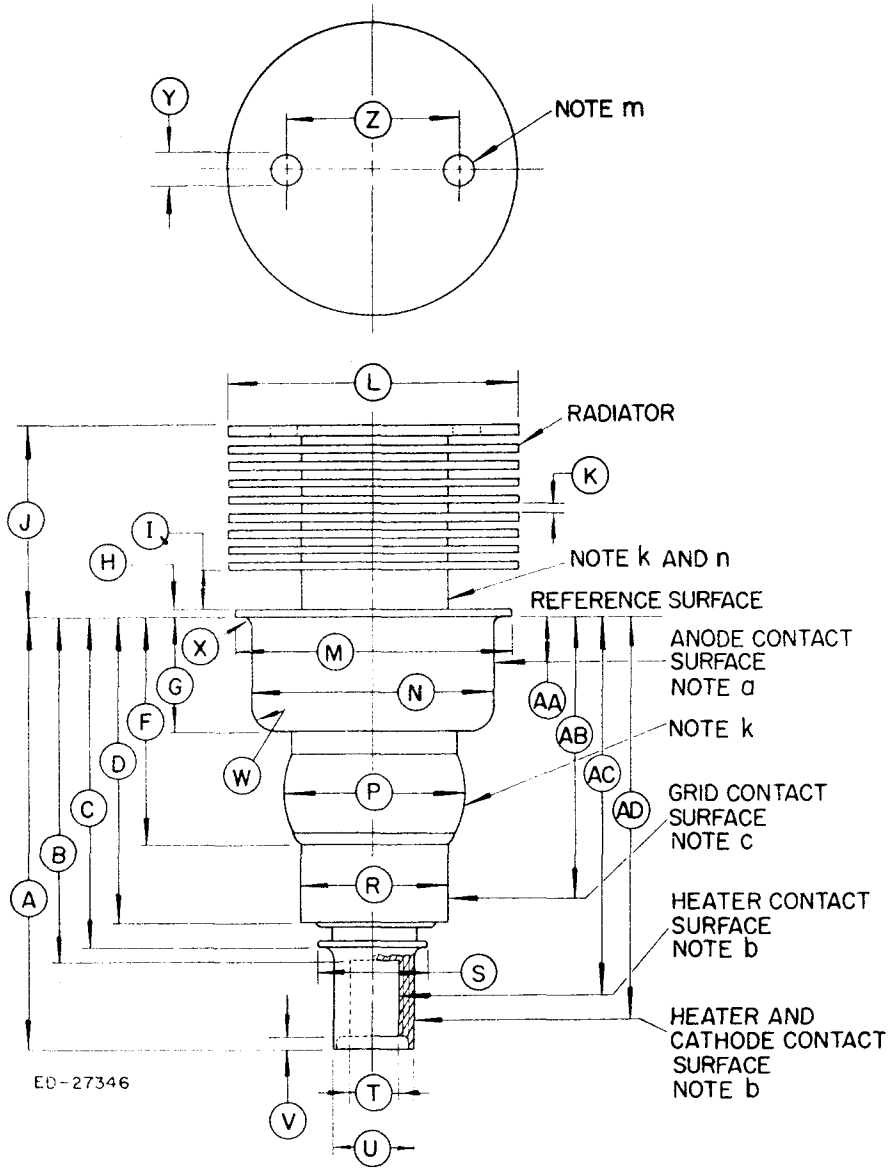

DIMENSIONS FOR OUTLINE (INCHES)

	DIMENSIONS A		DIMENSIONS B	
Ref.	Min.	Max.	Min.	Max.
A	1.815	1.875	1.788	1.858
B	—	1.534	—	1.517
C	—	1.475	—	1.458
D	1.289	1.329	1.252	1.292
F	—	0.980	—	1.000
G	0.462	.477	.459	.479
H	—	.040	—	.040
I	.125	.185	.125	—
J	.766	.826	.736	.826
K	.025	.046	.015	—
L	1.234	1.264	1.235	1.265
M	1.180	1.195	1.788	1.199
N	1.025	1.035	1.021	1.039
P	—	0.812	—	.812
R	0.655	0.665	.652	.668
S	—	.545	—	.545
T	0.213	.223	.213	.223
U	.315	.325	.312	.328
V	—	.086	—	.086
W	—	.100	—	.100
X	—	.035	.105	.145
Y	.105	.145	.650	.850
Z	.650	.850		

DIMENSIONS FOR ELECTRODE CONTACT AREA (INCHES)

DIMENSIONS A

Ref.	Dimensions	Contact
AA	0.198 ± 0.163	Anode
AB	1.225 ± .040	Grid
AC	1.631 ± .097	Heater
AD	1.645 ± .170	Cathode

DIMENSIONS B

Ref.	Dimension	Contact
AA	0.195 ± .163	Anode
AB	1.210 ± .040	Cathode & Heater
AC	1.610 ± .092	Heater
AD	1.623 ± .165	Cathode & Heater

NOTES

a. The total indicated runout of the anode contact surface with respect to the cathode contact surface will not exceed 0.020 inch, except ML-322; 0.030 inch, ML-322.

b. The total indicated runout of the cathode contact surface with respect to the heater contact surface will not exceed 0.012 inch, except ML-322; 0.018 inch, ML-322.

c. The total indicated runout of the grid contact surface with respect to the cathode contact surface will not exceed 0.020 inch. Does not apply to ML-322.

k. Do not clamp or locate on this surface.

m. Hole provided for tube extractor through top fin only.

n. Measure anode shank temperature here.