EIMAC
Division of Varian
SAN CARLOS
CALIFORNIA

290

RADIAL BEAM POWER PENTODE

The EIMAC 290 is a ceramic/metal, forced-air cooled, radial beam pentode with a rated maximum plate dissipation of 5000 watts. The tube has very low input capacitance for its power-handling capability. It is well suited for use in broad-band linear amplifiers or other high-performance Class AB1 amplifier applications.

GENERAL CHARACTERISTICS [1]

ELECTRICAL

Cathode: Oxide Coated, Unipotential
- Heater: Voltage ..... 6.0 ± 0.3 V
- Current, at 6.0 volts ..... 17 A

Transconductance (Average):
- I_b = 2.0 Adc, E_{c2} = 750 Vdc ..... 37,000 μmhos

Direct Interelectrode Capacitances (grounded cathode)[2]
- Input ..... 56 pF
- Output ..... 18 pF
- Feedback ..... 0.13 pF

Frequency of Maximum Rating:
- CW ..... 30 MHz

1. Characteristics and operating values are based upon performance tests. These figures may change without notice as the results of additional data or product refinement. EIMAC Division of Varian should be consulted before using this information for final equipment design.
2. Capacitance values are for a cold tube as measured in a special shielded fixture.

MECHANICAL

Maximum Overall Dimensions:
- Length ..... 7.250 in; 184.15 mm
- Diameter ..... 5.532 in; 140.51 mm

Net Weight ..... 9 lbs 2½ oz; 4.154 kg
Operating Position ..... Any
Maximum Operating Temperature:
- Ceramic/Metal Seals ..... 250 °C
- Anode Core ..... 250 °C

Cooling ..... Forced Air
Base ..... 7-Pin Special
Recommended Air System Socket ..... EIMAC SK-291A
Recommended Air Chimney (included with SK-291A) ..... EIMAC C-290

RADIO FREQUENCY LINEAR AMPLIFIER
GRID DRIVEN
Class AB_1

MAXIMUM RATINGS:

DC PLATE VOLTAGE	6000	VOLTS
DC SUPPRESSOR VOLTAGE	100	VOLTS
DC SCREEN VOLTAGE	1000	VOLTS
DC GRID VOLTAGE	-250	VOLTS
DC PLATE CURRENT	2.0	AMPERES
PLATE DISSIPATION	5000	WATTS
SCREEN DISSIPATION	50	WATTS
GRID DISSIPATION	2	WATTS

1. Adjust to specified zero-signal dc plate current.
2. The intermodulation distortion products will be as specified or better for all levels from zero-signal to maximum output power and are referenced against one tone of a two equal tone signal.
3. Approximate values.

TYPICAL OPERATION (Frequencies to 30 MHz)
Class AB_1, Grid Driven, Peak Envelope or Modulation Crest Conditions

Plate Voltage	5000	5000	6000	Vdc
Suppressor Voltage	0	0	0	Vdc
Screen Voltage	650	750	750	Vdc
Grid Voltage [1]	-93	-109	-111	Vdc
Zero-Signal Plate Current	400	400	400	mAdc
Single Tone Plate Current	1.36	1.69	1.74	Adc
Two-Tone Plate Current	0.91	1.09	1.11	Adc
Zero-Signal Screen Current [3]	6	7	6	mAdc
Single-Tone Screen Current [3/5]	55	80	60	mAdc
Two-Tone Screen Current [3]	23	32	25	mAdc
Peak rf Grid Voltage [3]	90	108	111	v
Useful Output Power [4]	4400	5500	6275	W
Resonant Load Impedance	1950	1550	1600	Ω
Intermodulation Distortion Products [2]				
3rd Order	-29	-26	-25	db
5th Order	-45	-40	-40	db

4. Actual power output delivered to the load from a typical amplifier.
5. Except for brief tuneup periods, operation under single tone conditions may not be possible due to excessive screen dissipation.

NOTE: TYPICAL OPERATION data are obtained by calculation from published characteristic curves. Adjustment of the rf grid voltage to obtain the specified plate current at the specified bias, screen and plate voltages is assumed. If this procedure is followed, there will be little variation in output power when the tube is changed, even though there may be some variation in grid and screen current. The grid and screen currents which result when the desired plate current is obtained are incidental and vary from tube to tube. These current variations cause no difficulty so long as the circuit maintains the correct voltage in the presence of the variations in current. If grid bias is obtained principally by means of a grid resistor, the resistor must be adjustable to obtain the required bias voltage when the correct rf grid voltage is applied.

RANGE VALUES FOR EQUIPMENT DESIGN

	Min.	Max.	
Heater: Current at 6.0 volts	15.5	18.5	A
Cathode Warmup Time	5	---	minutes
Interelectrode Capacitances [1] (grounded cathode connection)			
Input	51.0	61.0	pF
Output	14.0	22.0	pF
Feedback	---	0.16	pF

1. Capacitance values are for a cold tube as measured in a special shielded fixture.

APPLICATION

MOUNTING - The EIMAC Type 290 may be operated in any position, and should normally be mounted in the air-system socket EIMAC type SK-291A, with a C-290 chimney. The SK-291A has a built-in bypass capacitor for the screen grid, and the suppressor grid contact is grounded.

AIR SYSTEM SOCKET AND CHIMNEY - The SK-291A socket makes all electrical contacts to the Type 290 except to the anode. The suppressor grid contact is grounded to the socket shell. An integral screen grid bypass capacitor is included, with a capacitance of 2000 pF and rated for 1000 Vdc maximum. The C-290 chimney is designed to mate with the SK-291A socket and guide the cooling air through the anode cooling fins of the tube. The chimney is included with the socket and only when required as a replacement unit would separate procurement be necessary.

COOLING - Forced-air cooling is required in all applications, and the use of an air-system socket, such as the EIMAC SK-291A, with a C-290 chimney, is recommended. Cooling is simplified if air is directed, in a base-to-anode direction; when so directed, with air at 50°C at sea level, minimum air

flow requirements are shown, with approximate pressure drop values for the tube/socket/chimney combination, to limit the maximum anode core temperature to 200°C. If air is not directed in a base-to-anode direction, additional cooling may be required for the base section of the tube. Cooling air should be applied before or simultaneously with the application of electrode voltages, including the heater, and should normally be maintained for a brief period after electrode voltages are removed to allow for tube cooldown.

Anode Diss.	Air Flow	Press. Drop
3000 W	78 cfm	0.32 In. H_2O
4000	124	0.50
5000	166	0.72

HEATER - The rated heater voltage for the Type 290 is 6.0 volts, as measured at the socket or tube base pins. Variations should be restricted to plus or minus 0.3 volt for long tube life and consistent performance.

GRID OPERATION - Grid-bias voltage must be obtained from a fixed bias supply in Class AB applications. The internal resistance of the source should not exceed 2500 ohms.

SCREEN OPERATION - In linear amplifier service, the screen voltage must be obtained from a well regulated source, to prevent excessive screen voltage variations due to changes in screen current which occur between zero-signal and full-signal conditions. The circuit should be arranged so that it is impossible to apply screen voltage without plate voltage. The use of a screen grid over-current relay is recommended, to remove screen voltage immediately in case of excessive screen current due to circuit problems, grid bias failure, or accidental removal of plate circuit loading.

PLATE OPERATION - The maximum rated plate dissipation power for the Type 290 is 5000 watts. Except for brief periods during circuit adjustment, this maximum value should not be exceeded. Contact to the plate may be made either at the top cap or by means of a circular clamp or spring-finger collet around the outer surface of the anode cooler itself. Points of electrical contact with the anode should be kept clean and free of oxide to minimize rf loss. The anode cooler should be inspected periodically and cleaned when necessary to remove any dirt which might interfere with effective cooling.

NEUTRALIZATION FOR RF OPERATION - For minimum-distortion Class AB_1 linear amplifier service, where reaction on the driver circuit should be eliminated completely, it will usually be found advisable to neutralize the small feedback capacitance of the tube.

GENERAL OPERATION NOTES - A metal chassis or equivalent means should be provided to separate the input and output circuits of an rf amplifier employing the Type 290. Reasonable precautions should be observed in regard to bypassing and shielding of supply leads to prevent coupling between input and output through external circuits. The use of the EIMAC SK-291A air-system socket, with its integral screen grid bypass capacitance built in, is helpful in these respects.

SPECIAL APPLICATION - If it is desired to operate this tube under conditions widely different from those listed here, write to Power Grid Tube Division, EIMAC Division of Varian, 301 Industrial Way, San Carlos, California 94070, for information and recommendations.

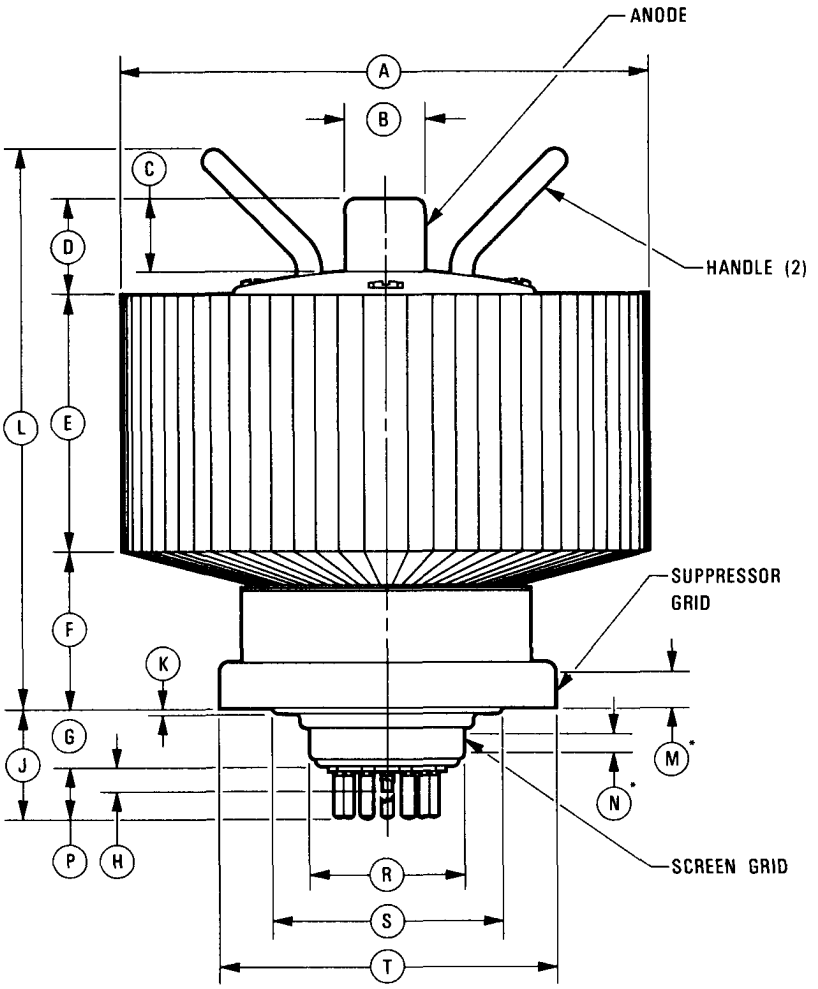

DIMENSIONAL DATA						
DIM.	INCHES			MILLIMETERS		
	MIN.	MAX.	REF.	MIN.	MAX.	REF.
A	5.468	5.532		138.89	140.51	
B	.805	.819		20.45	20.80	
C	.688	--		17.48	--	
D	.937	1.062		23.80	26.98	
E	2.624	2.688		66.65	68.28	
F	1.625	1.750		41.28	44.45	
G	.624	.688		15.85	17.48	
H	--	--	.187	--	--	4.75
J	1.062	1.250		26.97	31.75	
K	--	.125		--	3.18	
L	--	6.000		--	152.40	
M	.375	--		9.53	--	
N	.220	--		5.59	--	
P	.437	.562		11.10	14.27	
R	1.615	1.629		41.02	41.38	
S	--	2.812		--	46.02	
T	3.484	3.516		88.49	89.31	
U	--	--	51°	--	--	51°
V	--	--	52°	--	--	52°
W	.122	.128		3.10	3.25	
X	--	--	1.000	--	--	25.40
Y	.149	.159		3.78	4.04	

NOTES:

1. (*) CONTACT SURFACE
2. REFERENCE DIMENSIONS ARE FOR INFORMATION ONLY & ARE NOT REQUIRED FOR INSPECTION PURPOSES.

PIN CONNECTIONS

PIN NO.	ELEMENT
1	k
2	g1
3	h
4	k
5	h
6	g1
7	k
CENTER PIN	int. con.
LOWER RING	g2
UPPER RING	g3
CAP	p

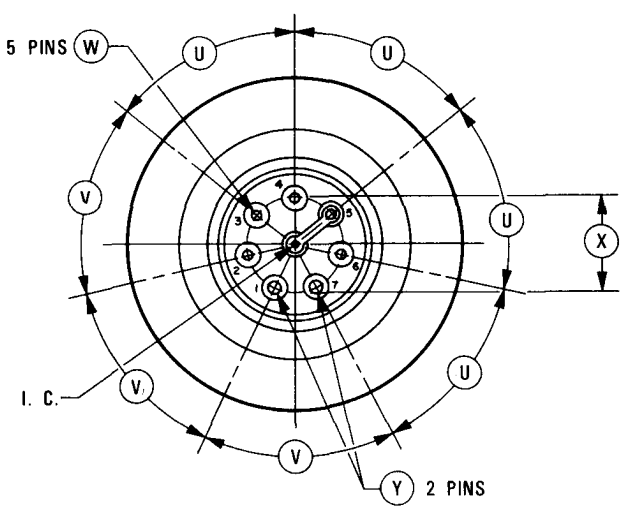

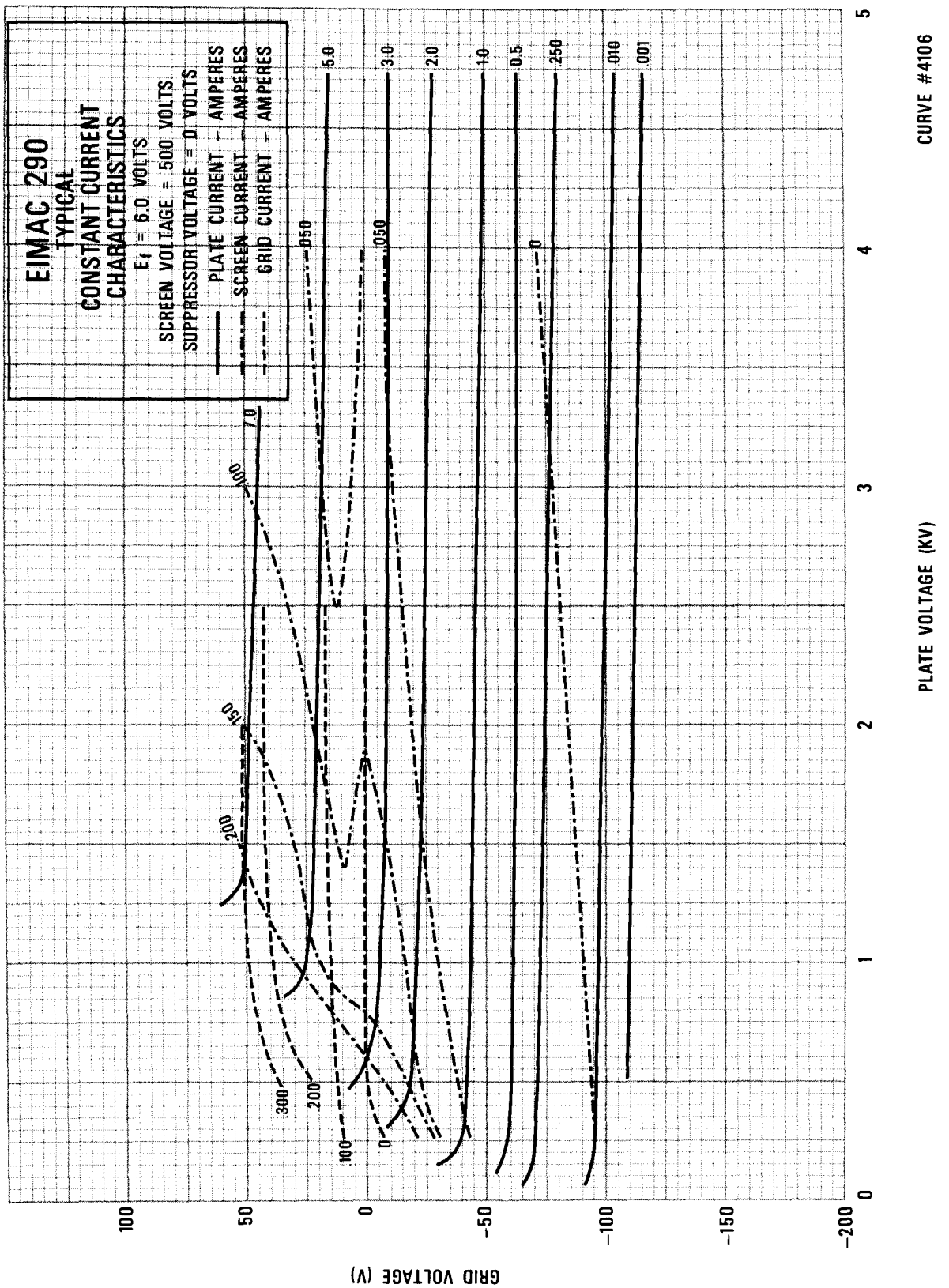
EIMAC 290
TYPICAL
CONSTANT CURRENT
CHARACTERISTICS
Ef = 6.0 VOLTS
SCREEN VOLTAGE = 500 VOLTS
SUPPRESSOR VOLTAGE = 0 VOLTS
PLATE CURRENT - AMPERES
SCREEN CURRENT - AMPERES
GRID CURRENT - AMPERES
5.0
3.0
2.0
1.0
0.5
.250
.010
.001
.050
.050
0
7.0
400
150
200
300
200
100
0
GRID VOLTAGE (V)
100
50
0
-50
-100
-150
-200
PLATE VOLTAGE (KV)
0
1
2
3
4
5
CURVE #4106

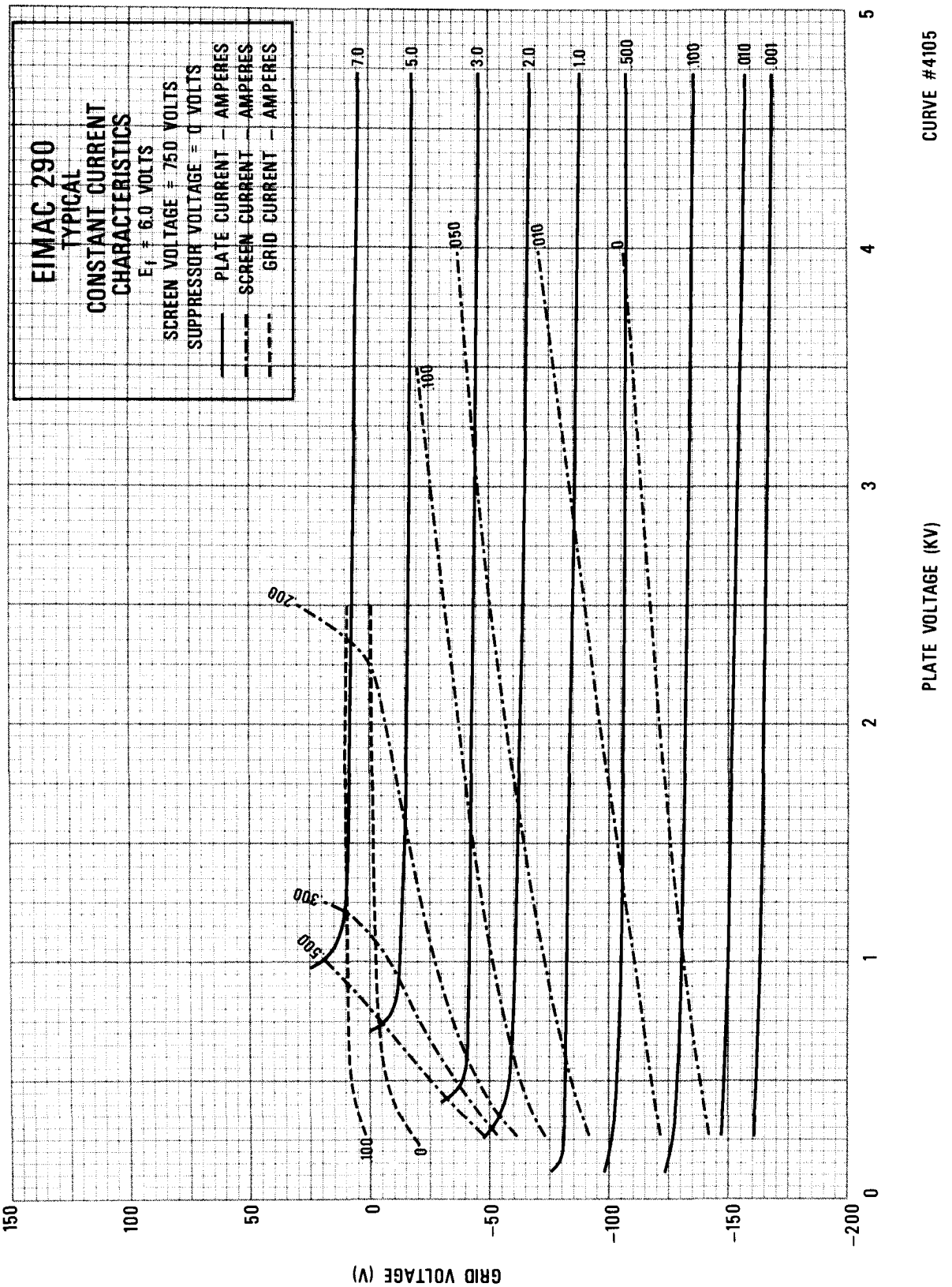
EIMAC 290
TYPICAL
CONSTANT CURRENT
CHARACTERISTICS
E_f = 6.0 VOLTS
SCREEN VOLTAGE = 750 VOLTS
SUPPRESSOR VOLTAGE = 0 VOLTS
PLATE CURRENT – AMPERES
SCREEN CURRENT – AMPERES
GRID CURRENT – AMPERES
7.0
5.0
3.0
2.0
1.0
.500
.100
.010
.001
.100
.050
.010
0
200
300
500
100
0
150
100
50
0
−50
−100
−150
−200
0
1
2
3
4
5
GRID VOLTAGE (V)
PLATE VOLTAGE (KV)

CURVE #4105