CHARACTERISTICS

GENERAL DATA

Focusing Method	Electrostatic
Deflection Method	Magnetic
Deflection Angles (Approx.)	
Horizontal	85 Degrees
Diagonal	90 Degrees
Vertical	68 Degrees
Phosphor	Aluminized P4
Fluorescence	White
Persistence	Short to Medium
Faceplate	Bonded Shield
Gray Filterglass Safety Plate Laminated Directly to Face of Tube	
Light Transmittance of Faceplate Assembly (Approx.)	45 Percent

ELECTRICAL DATA

Heater Voltage	6.3 Volts	
Heater Current	0.6 ± 5 % Ampere	
Heater Warm-up Time[1]	11 Seconds	
Direct Interelectrode Capacitances (Approx.)		
Cathode to All Other Electrodes	5 μμf	
Grid No. 1 to All Other Electrodes	6 μμf	
External Conductive Coating to Anode[2]	2500 μμf	Max.
	2000 μμf	Min.

MECHANICAL DATA

Minimum Useful Screen Dimensions (Maximum Assured)	24 ¼ x 18⅝ Inches
Minimum Useful Screen Area	425 Square Inches
Neck Length	6 ± 3/16 Inches
Overall Length	21 13/16 ± 7/16 Inches
Bulb	J214 ½A
Faceplate	FP-214 ½A1
Bulb Contact (Recessed Small Cavity Cap)	J1-21
Base	B6-203
Basing	12L
Weight (Approx.)	54 Pounds

RATINGS

MAXIMUM RATINGS (Design Maximum Values)

Grid Drive Service[3]		
Maximum Anode Voltage	25,000 Volts	dc
Minimum Anode Voltage	11,000 Volts	dc
Grid No. 4 Voltage (Focusing Electrode)	-550 to +1100 Volts	dc
Maximum Grid No. 2 Voltage	550 Volts	dc
Minimum Grid No. 2 Voltage	200 Volts	dc
Grid No. 1 Voltage		
Negative Bias Value	155 Volts	dc
Negative Peak Value	220 Volts	dc
Positive Bias Value	0 Volts	
Positive Peak Value	2 Volts	
Peak-Heater-Cathode Voltage		
Heater Negative with Respect to Cathode		
During Warm-up Period not to Exceed 15 Sec.	450 Volts	
After Equipment Warm-up Period	200 Volts	
Heater Positive with Respect to Cathode	200 Volts	

QUICK REFERENCE DATA

Television Picture Tube
27″ Direct Viewed
Rectangular Glass Type
Spherical Faceplate
Gray Filter Glass
Aluminized Screen
Electrostatic Focus
90° Magnetic Deflection
1 7/16″ Neck Diameter
No Ion Trap
External Conductive Coating
Bonded Shield

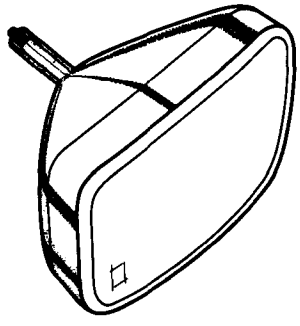

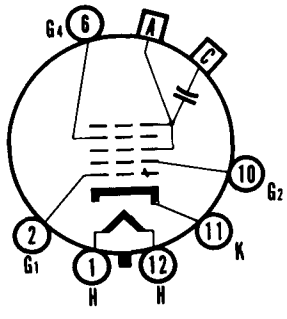

12-L

SYLVANIA
ELECTRONIC TUBES

A Division of
Sylvania Electric Products Inc.

PICTURE TUBE
OPERATIONS

SENECA FALLS, NEW YORK

Prepared and Released By The
TECHNICAL PUBLICATIONS SECTION
EMPORIUM, PENNSYLVANIA

DECEMBER, 1962

File Under
TELEVISION PICTURE TUBES

MAXIMUM RATINGS (Design Maximum Values) Continued

Cathode Drive Service[4]		
Maximum Anode Voltage	25,000 Volts	dc
Minimum Anode Voltage	11,000 Volts	dc
Grid No. 4 Voltage (Focusing Electrode)	−400 to +1250 Volts	dc
Maximum Grid No. 2 Voltage	700 Volts	dc
Minimum Grid No. 2 Voltage	350 Volts	dc
Cathode Voltage		
Positive Bias Value	155 Volts	dc
Positive Peak Value	220 Volts	
Negative Bias Value	0 Volts	dc
Negative Peak Value	2 Volts	
Peak Heater-Cathode Voltage		
Heater Negative with Respect to Cathode During		
Warm-up Period not to Exceed 15 Seconds	450 Volts	
After Equipment Warm-up Period	200 Volts	
Heater Positive with Respect to Cathode	200 Volts	

TYPICAL OPERATING CONDITIONS

Grid Drive Service[3]		
Anode Voltage	18,000 Volts	dc
Grid No. 4 Voltage for Focus	0 to 400 Volts	dc
Grid No. 2 Voltage	400 Volts	dc
Grid No. 1 Voltage Required for Cutoff[5]	−48 to −96 Volts	dc
Cathode Drive Service[4]		
Anode Voltage	18,000 Volts	dc
Grid No. 4 Voltage for Focus	0 to 400 Volts	dc
Grid No. 2 Voltage	400 Volts	dc
Cathode Voltage Required for Cutoff[5]	+46 to +80 Volts	dc

CIRCUIT VALUES

Grid No. 1 Circuit Resistance	1.5 Megohms Max.

NOTES:

1. *Heater warm-up time is defined as the time required for the voltage across the heater to reach 80 % of its rated value after applying four (4) times rated heater voltage to a circuit consisting of the tube heater in series with a resistance equal to three (3) times rated heater voltage divided by rated heater current.*
2. *External conductive coating must be grounded.*
3. *Unless otherwise specified, voltages are positive with respect to cathode.*
4. *Unless otherwise specified, voltages are positive with respect to Grid No. 1.*
5. *Visual extinction of focused raster. Extinction of stationary focused spot will require that these values be increased by about 5 volts.*

WARNING:

X-ray radiation shielding may be necessary to protect against possible danger of personal injury from prolonged exposure at close range if this tube is operated at higher than the manufacturer's Maximum Rated Anode Voltage or 16,000 volts, whichever is less.

OUTLINE

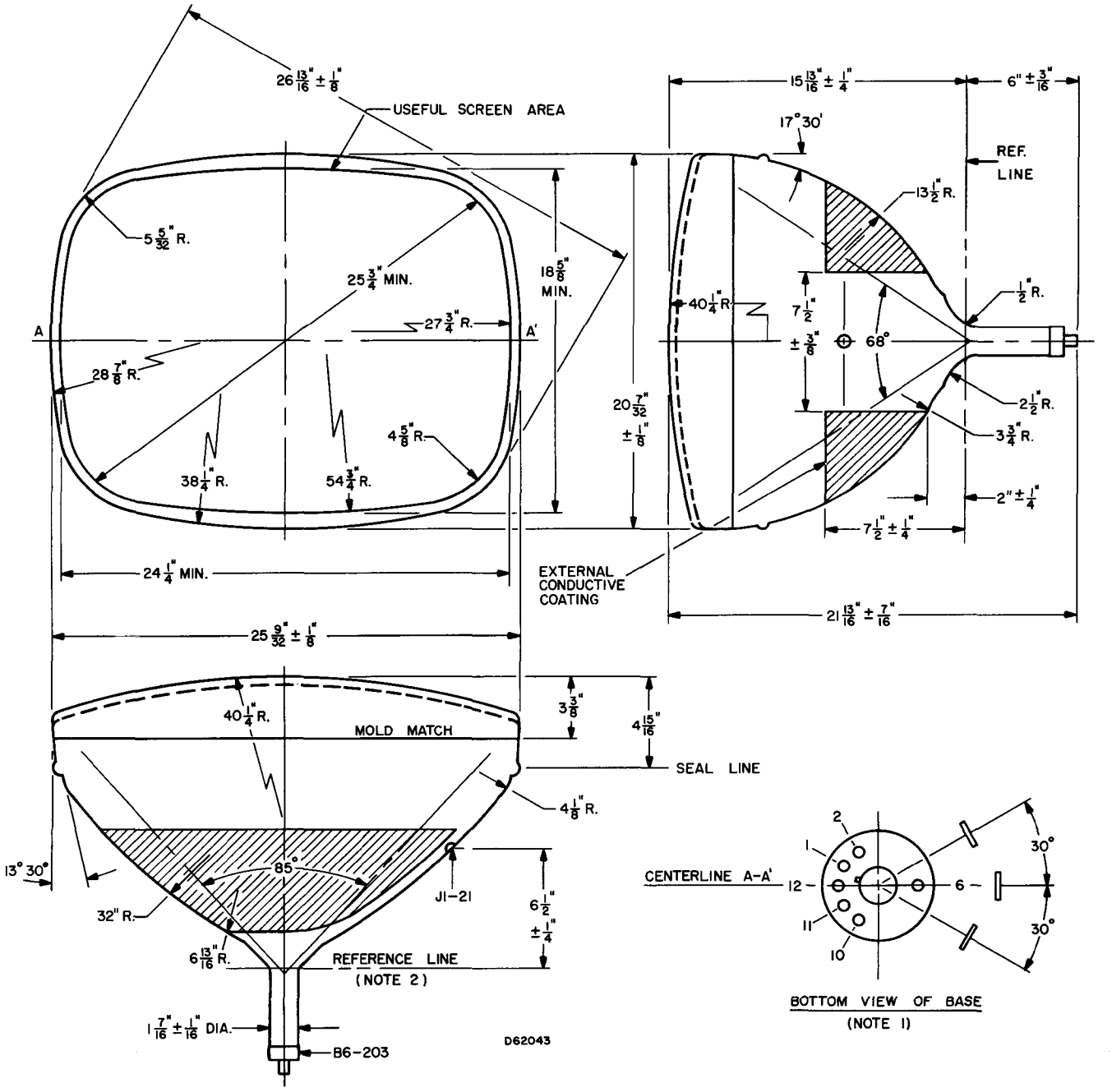

DIAGRAM NOTES:

1. *The plane through the tube axis and Pin No. 6 may vary from the plane through the tube axis and anode terminal by an angular tolerance (measured about the tube axis) of ±30°. Anode terminal is on same side as Pin No. 6.*
2. *With tube neck inserted through flared end of reference line gauge JEDEC No. G-116 and with tube seated in gauge, the reference line is determined by the intersection of the Plane CC' of the gauge with the glass funnel.*