SYLVANIA

engineering data service

SYLVANIA

25F5

MECHANICAL DATA

Bulb	T-5 ½
Base	E7-1, Miniature Button 7-Pin
Outline	5-3
Basing	7CV
Cathode	Coated Unipotential
Mounting Position	Any

ELECTRICAL DATA

HEATER CHARACTERISTICS

Heater Voltage	25.0 Volts
Heater Current	150 Ma
Heater-Cathode Voltage (Design Center Values)	
Heater Negative with Respect to Cathode	
Total DC and Peak	200 Volts Max.
Heater Positive with Respect to Cathode	
DC	100 Volts Max.
Total DC and Peak	200 Volts Max.

DIRECT INTERELECTRODE CAPACITANCE (Unshielded)

Grid to Plate	0.57 μμf
Input	12.0 μμf
Output	6.0 μμf

RATINGS (Design Center Values)

Plate Voltage	135 Volts Max.
Grid No. 2 Voltage	117 Volts Max.
Plate Dissipation	4.5 Watts Max.
Grid No. 2 Dissipation	1.0 Watt Max.
Grid No. 1 Circuit Resistance	
Fixed Bias	0.1 Megohm Max.
Cathode Bias	0.5 Megohm Max.

CHARACTERISTICS AND TYPICAL OPERATION (Single Tube)

Class A_1 Amplifier

Plate Voltage	110 Volts
Grid No. 2 Voltage	110 Volts
Grid No. 1 Voltage	-7.5 Volts
Peak AF Grid No. 1 Voltage	7.5 Volts
Zero Signal Plate Current	36 Ma
Maximum Signal Plate Current	37 Ma
Zero Signal Grid No. 2 Current	3.0 Ma
Maximum Signal Grid No. 2 Current	7.0 Ma
Plate Resistance (approx.)	16000 Ohms
Transconductance	5800 μmhos
Load Resistance	2,500 Ohms
Maximum Signal Power Output	1.2 Watts
Total Harmonic Distortion (approx.)	10 Percent

QUICK REFERENCE DATA

The Sylvania Type 25F5 is a miniature beam power amplifier featuring high sensitivity and high efficiency at plate and screen voltage normally available in ac/dc receivers.

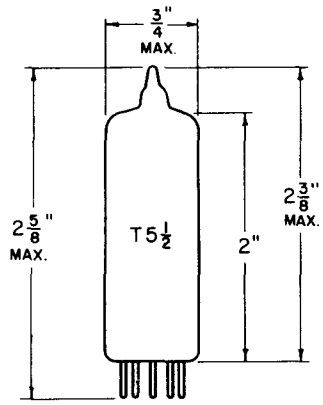

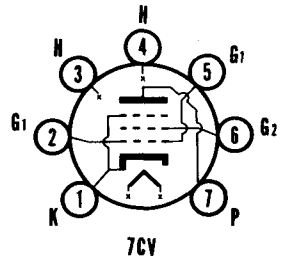

SYLVANIA ELECTRIC PRODUCTS INC.

RADIO TUBE DIVISION
EMPORIUM, PA.

Prepared and Released By The
TECHNICAL PUBLICATIONS SECTION
EMPORIUM, PENNSYLVANIA

DEC. 1956

Class A_1 Amplifier (two tubes in push-pull)

Plate Voltage	110 Volts
Grid No. 2 Voltage	110 Volts
Grid No. 1 Voltage	-8.0 Volts
Peak AF Grid to Grid Voltage	16 Volts
Zero Signal Plate Current	70 Ma
Maximum Signal Plate Current	78 Ma
Zero Signal Grid No. 2 Current	7.5 Ma
Maximum Signal Grid No. 2 Current	13.6 Ma
Load Resistance	4500 Ohms
Maximum Signal Power Output	2.9 Watts
Total Harmonic Distortion	2.6 Percent

AVERAGE PLATE CHARACTERISTICS

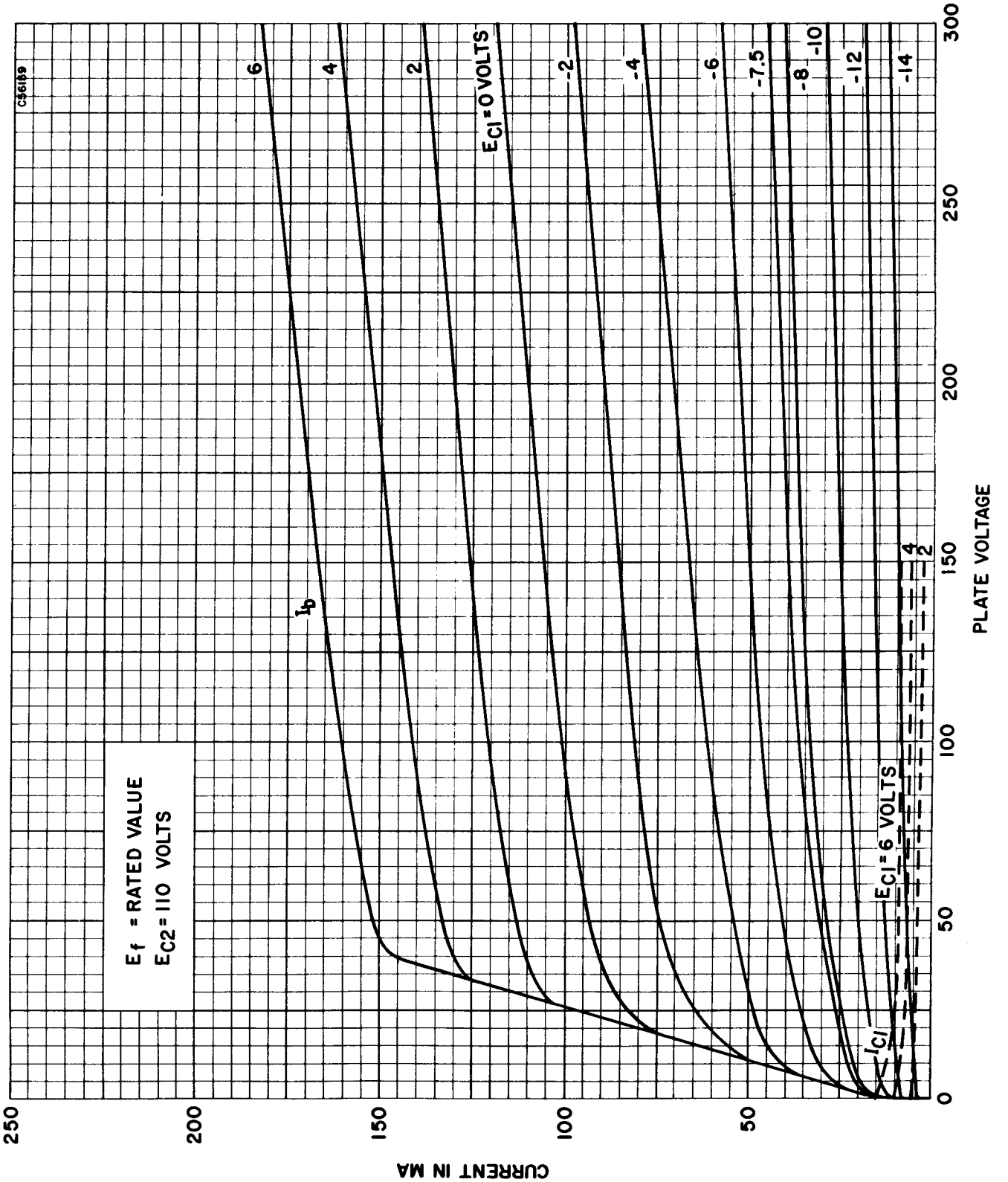

AVERAGE PLATE CHARACTERISTICS

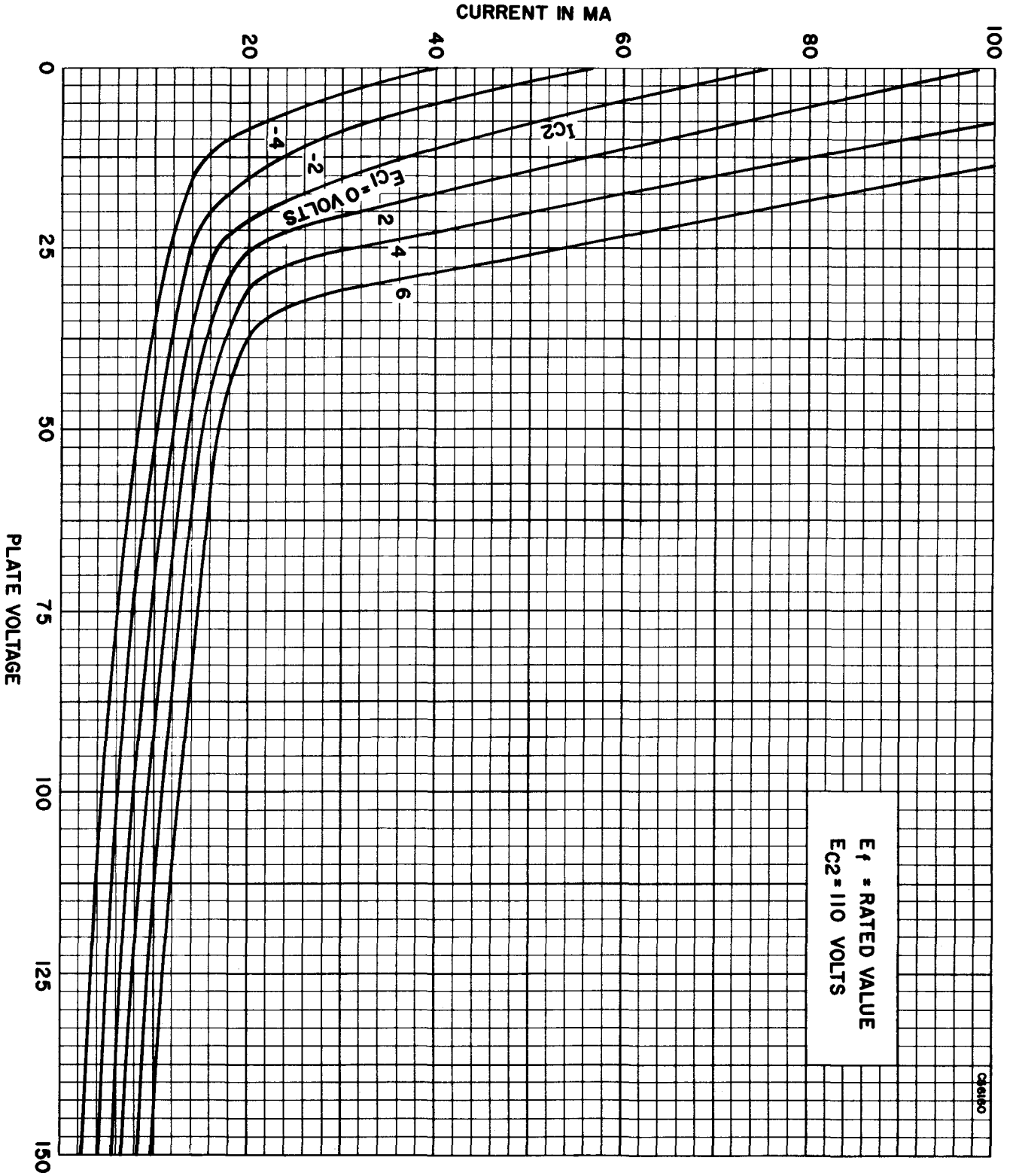
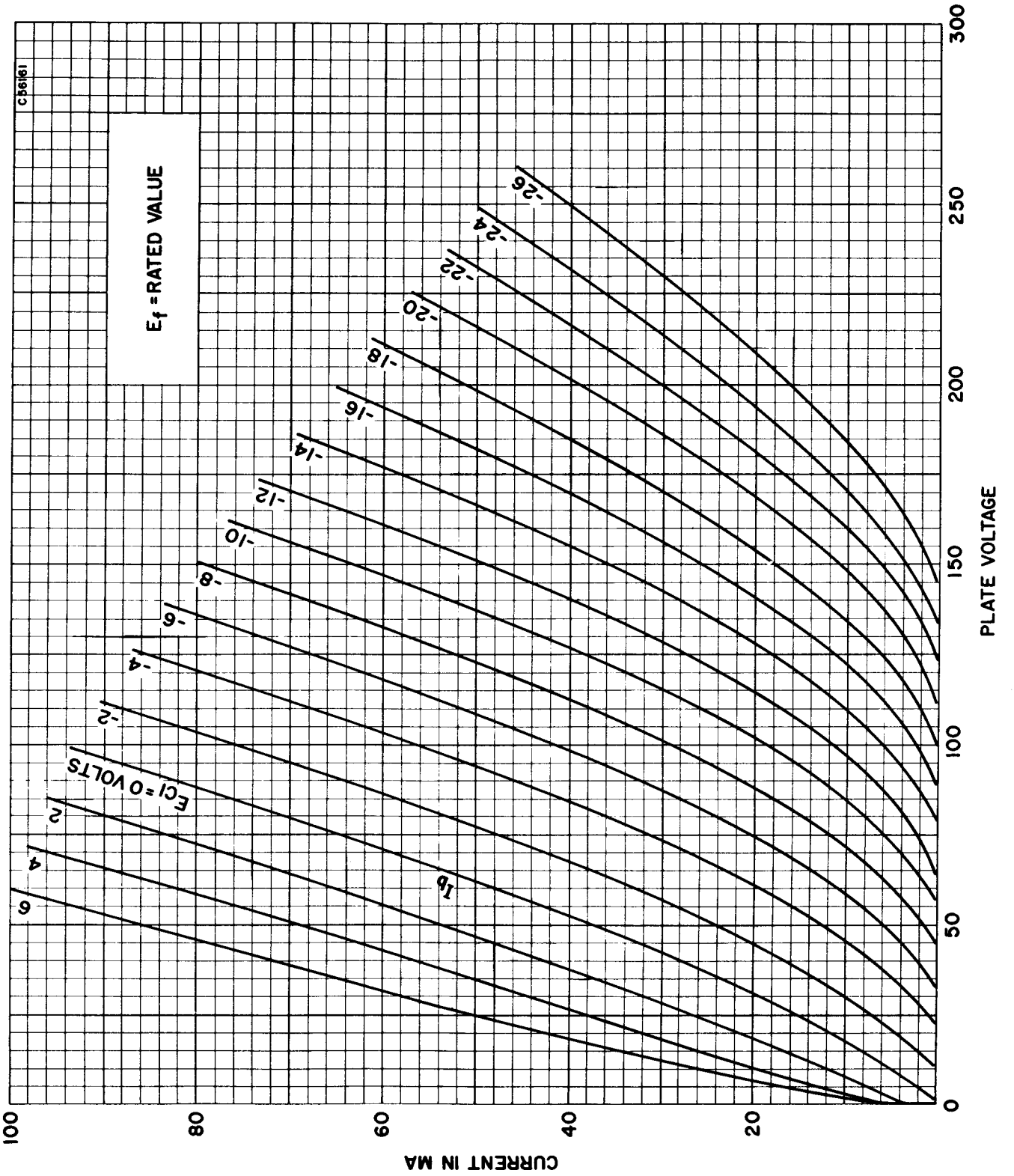
AVERAGE PLATE CHARACTERISTICS
(TRIODE CONNECTED)