SYLVANIA

engineering data service

SYLVANIA
25DP4
25EP4

CHARACTERISTICS

GENERAL DATA

Focusing Method	Electrostatic
Deflection Method	Magnetic
Deflection Angles (Approx.)	
Horizontal	100 Degrees
Diagonal	110 Degrees
Vertical	83 Degrees
Phosphor	Aluminized P4
Fluorescence	White
Persistence	Medium Short
Faceplate	Gray Filter Glass
Light Transmittance at Center (Approx.)	40 Percent

ELECTRICAL DATA

Heater Voltage	6.3 Volts	
Heater Current	0.3 ± 5 % Ampere	
Heater Warm-up Time[1]	14 Seconds	
Direct Interelectrode Capacitances (Approx.)		
Cathode to All Other Electrodes	5 pf	
Grid No. 1 to All Other Electrodes	6 pf	
External Conductive Coating and Metal Frame to Anode[2]	2500 pf	Max.
	2000 pf	Min.
Resistance Between External Conductive Coating and Metal Frame	50 Megohms Min.	

MECHANICAL DATA

Minimum Useful Screen Dimensions (Maximum Assured)	
Height	$16\frac{7}{16}$ Inches
Width	$20\frac{15}{16}$ Inches
Diagonal	$24\frac{1}{4}$ Inches
Area	327 Sq. Inches
Neck Length	
25DP4	$4\frac{3}{8} \pm \frac{1}{8}$ Inches
25EP4	$5\frac{1}{8} \pm \frac{1}{8}$ Inches
Overall Length	
25DP4	$15\frac{1}{16} \pm \frac{5}{16}$ Inches
25EP4	$15\frac{13}{16} \pm \frac{5}{16}$ Inches
Bulb	C204 Exp. No. 1
Bulb Contact (Recessed Small Cavity Cap)	J1-21
Base	B7-208
Basing	8HR
Weight (Approx.)	36 Pounds

RATINGS

MAXIMUM RATINGS (Design Maximum Values)

Grid Drive Service[3]

Maximum Anode Voltage	22,000 Volts	dc
Minimum Anode Voltage	12,000 Volts	dc
Grid No. 4 (Focusing Electrode) Voltage	−550 to +1100 Volts	dc
Maximum Grid No. 2 Voltage	700 Volts	dc
Minimum Grid No. 2 Voltage	200 Volts	
Grid No. 1 Voltage		
Negative Bias Value	155 Volts	dc
Negative Peak Value	200 Volts	
Positive Bias Value	0 Volt	dc
Positive Peak Value	2 Volts	
Peak Heater-Cathode Voltage		
Heater Negative with Respect to Cathode		
During Warm-up Period Not to Exceed 15 Seconds	450 Volts	
After Equipment Warm-up Period	300 Volts	
Heater Positive with Respect to Cathode	200 Volts	
DC Component	100 Volts	

QUICK REFERENCE DATA

Television Picture Tube
25″ Direct Viewed
Rectangular Glass Type
Gray Filter Glass
Aluminized Screen
Electrostatic Focus
110° Magnetic Deflection
No Ion Trap
External Conductive Coating
Bonded Frame (Filled Rim)
Implosion Protection
25DP4: Short Neck

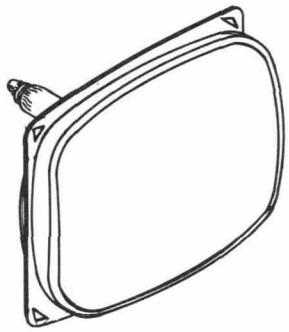

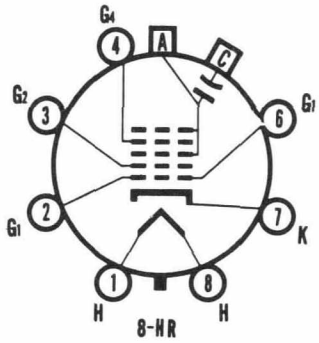

SYLVANIA ELECTRIC PRODUCTS INC.

Electronic Components Group
ELECTRONIC TUBE DIVISION
SENECA FALLS, NEW YORK

A Technical Publication
MARCH, 1965

File Under
TELEVISION PICTURE TUBES

TYPICAL OPERATING CONDITIONS

Grid Drive Service[3]		
Anode Voltage	16,000 Volts	dc
Grid No. 4 Voltage for Focus[6]	0 Volt	dc
Grid No. 2 Voltage	300 Volts	dc
Grid No. 1 Voltage Required for cutoff[5]	−35 to −72 Volts	dc
Cathode Drive Service[4]		
Anode Voltage	16,000 Volts	dc
Grid No. 4 Voltage for Focus[6]	0 Volt	dc
Grid No. 2 Voltage	300 Volts	dc
Cathode Voltage Required for Cutoff[5]	+32 to +60 Volts	dc

CIRCUIT VALUES

Grid No. 1 Resistance	1.5 Megohms Max.

NOTES:

1. *Heater warm-up time is defined as the time required for the voltage across the heater to reach 80 % of the rated heater voltage after applying four (4) times rated heater voltage to a circuit consisting of the tube heater in series with a resistance equal to three (3) times the rated heater voltage divided by the rated heater current.*
2. *External conductive coating and rim band must be grounded.*
3. *Voltages are positive with respect to cathode unless otherwise indicated.*
4. *Voltages are positive with respect to Grid No. 1 unless otherwise indicated.*
5. *Visual extinction of focused raster. Extinction of stationary focused spot will require that the absolute value of the bias between cathode and grid No. 1 be increased by about 5 volts.*
6. *Tubes will have satisfactory focus at some value between −200 and +200 volts.*

WARNING:

X-ray radiation shielding may be necessary to protect against possible danger of personal injury from prolonged exposure at close range if this tube is operated at higher than the manufacturer's Maximum Rated Anode Voltage or 16,000 volts, whichever is less.

OUTLINE

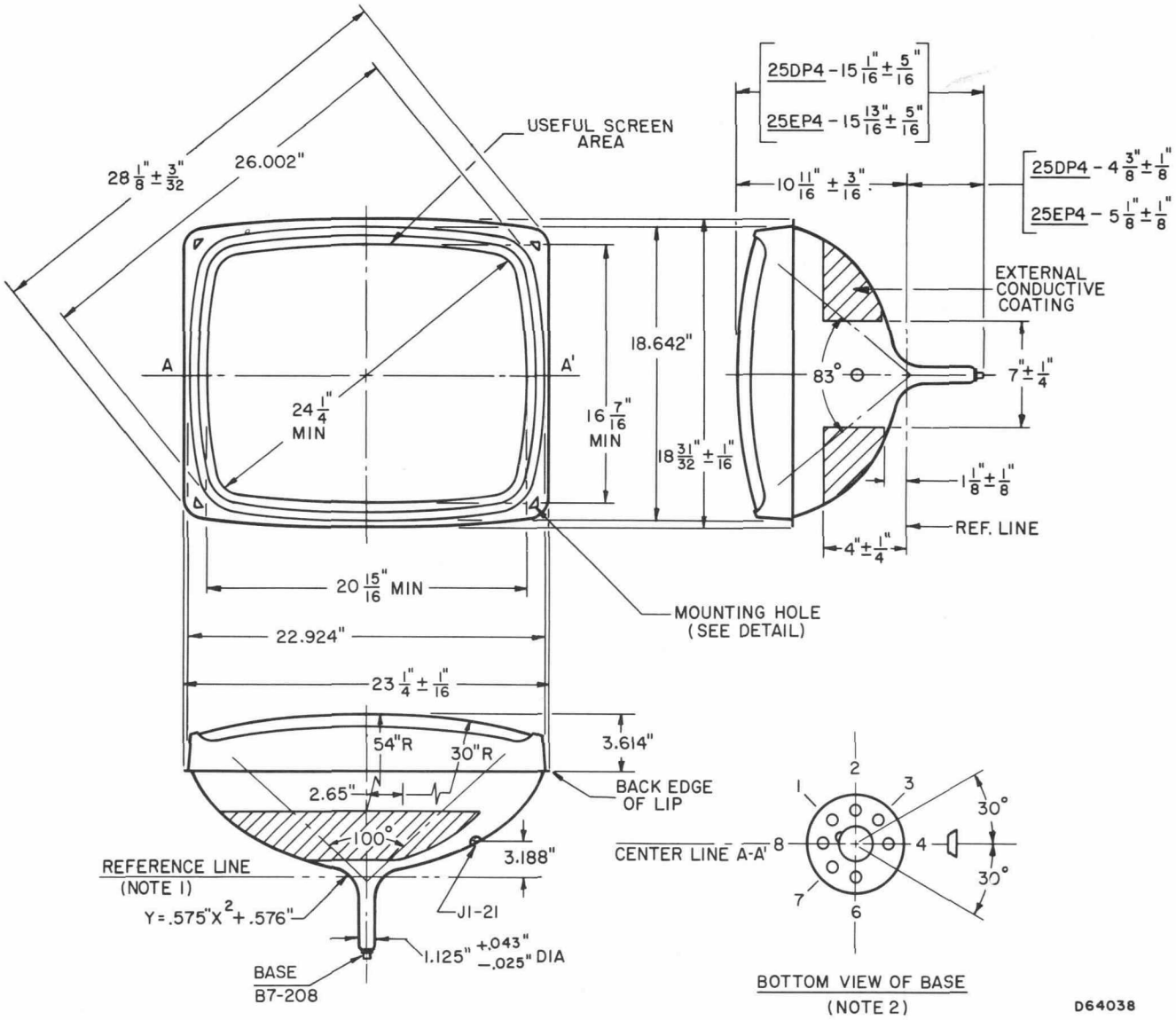

Detail of
Mounting Hole
(1 hole in each corner)

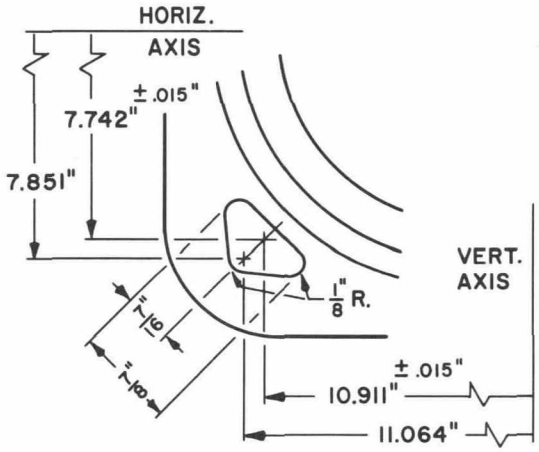

DIAGRAM NOTES:

1. *Reference Line is determined by plane C-C' of JEDEC No. 126 Reference Line Gauge, when the gauge is seated against the bulb.*
2. *Base Pin No. 4 aligns with horizontal centerline (A-A') within 30° and is on same side as anode contact, J1-21.*