This bulletin is to be used in conjunction with bulletin for RCA-25AP22

25BP22

90° RECTANGULAR COLOR PICTURE TUBE

RCA-25BP22 is a directly viewed, 25-inch rectangular picture tube which is identical to RCA-25AP22 except that it does not have an integral protective window sealed to the faceplate.

It is recommended that the cabinet be provided with a shatter-proof, glass cover over the face of the 25BP22 to protect it from being struck accidentally and to protect against possible damage resulting from tube implosion under some abnormal condition. This safety cover can also provide X-ray protection when required.

For description, operating principles, general data, maximum and minimum ratings, equipment design ranges, examples of use of design ranges, limiting circuit values, general considerations, component considerations, operating characteristics, and adjustment procedures of the 25BP22; refer to the technical bulletin for the 25AP22, except as noted below.

Ignore all reference to the integral protective window.

Faceplate . . . . . Filterglass
Light transmission (Approx.) 69%

Tube Dimensions:
Overall length . . . . . 20.732" ± .375"
Weight (Approx.) . . . . . 35 lbs.

TYPICAL LIGHT-OUTPUT CHARACTERISTIC

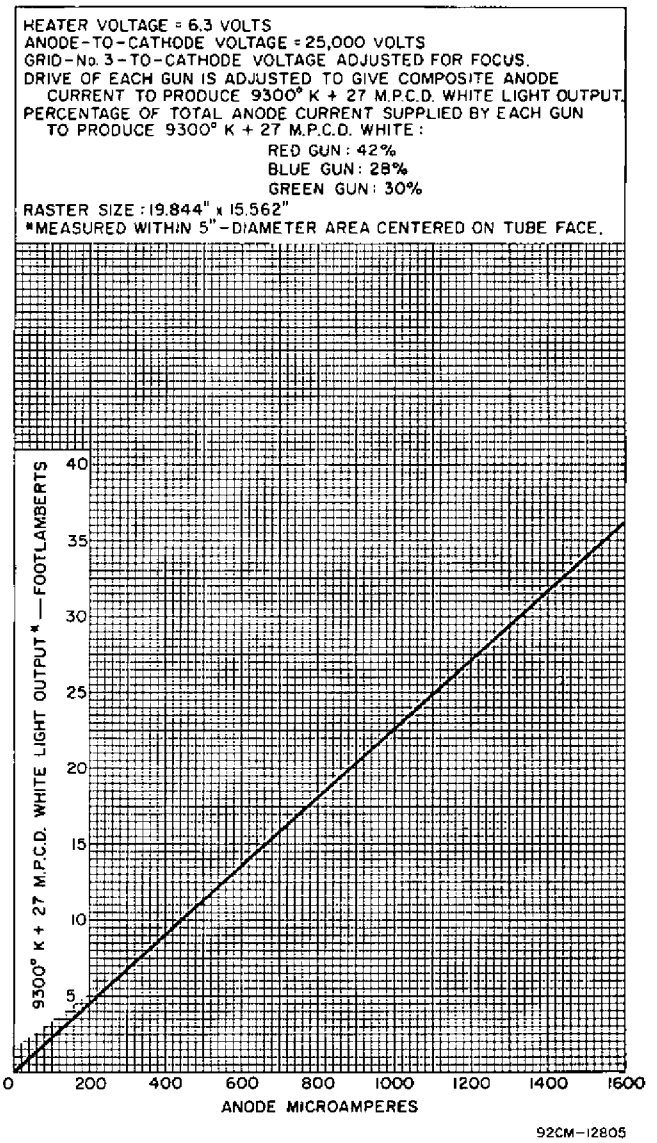

Fig.8

from JEDEC release #4887, Dec. 21, 1964

Information furnished by RCA is believed to be accurate and reliable. However, no responsibility is assumed by RCA for its use; nor for any infringements of patents or other rights of third parties which may result from its use. No license is granted by implication or otherwise under any patent or patent rights of RCA.

RADIO CORPORATION OF AMERICA
Electronic Components and Devices Harrison, N. J.

Trademark(s) ® Registered
Marca(s) Registrada(s)

25BP22 10-64
Printed in U.S.A.

DIMENSIONAL OUTLINE

Dimensions shown are only those which are different from the corresponding dimensions for the 25AP22

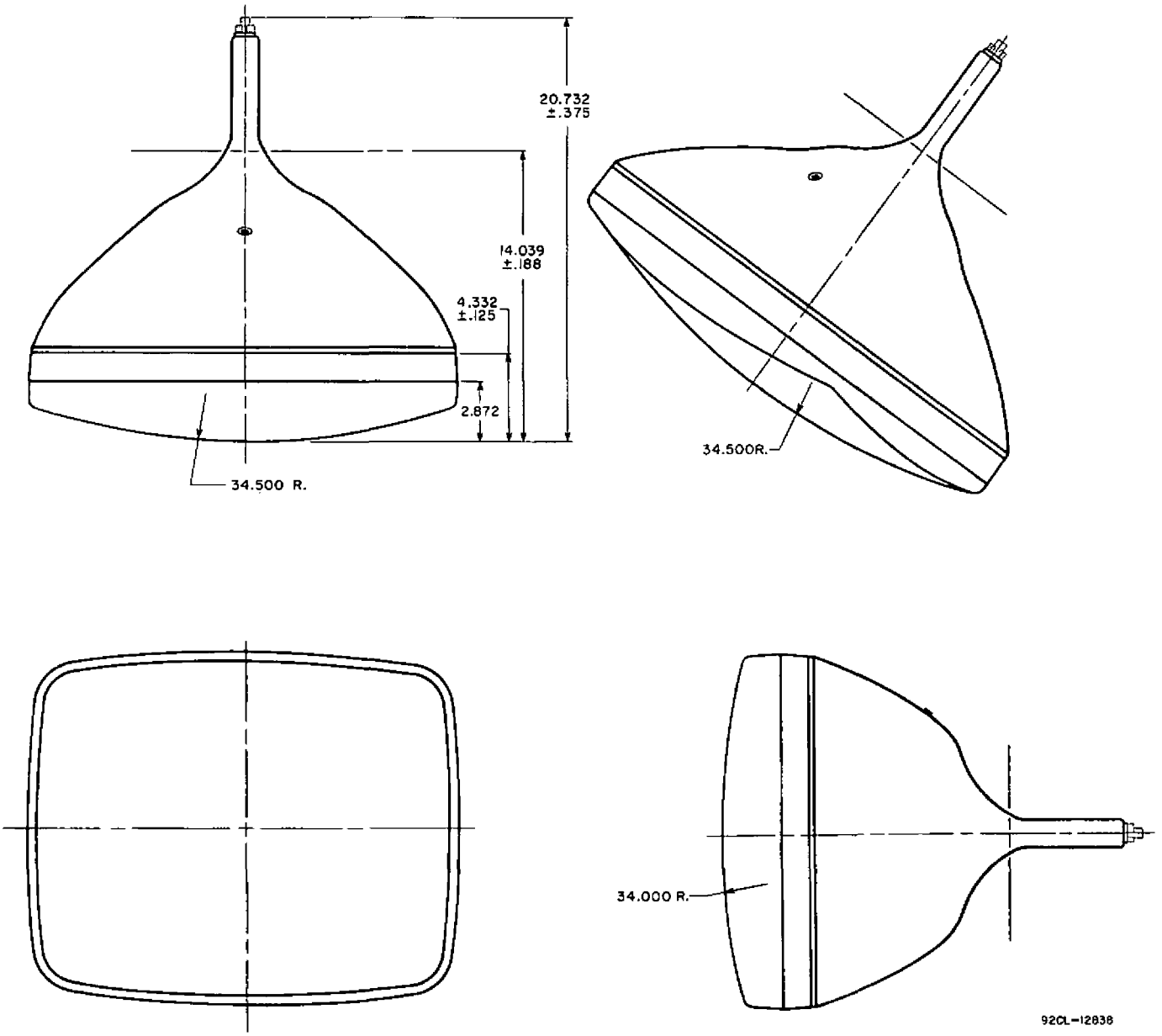

Dimensions in Inches