EIMAC
Division of Varian
SAN CARLOS
CALIFORNIA

250R
HIGH-VACUUM RECTIFIER

The Eimac 250R is a high-vacuum diode rectifier intended for use in rectifier units, voltage multipliers, or in special applications, whenever conditions of extreme ambient temperatures, high operating frequency, high peak inverse voltages, or the production of high-frequency transients would prevent the use of gas-filled rectifier tubes.

The 250R has a maximum d-c current rating of 250 milliamperes and a maximum peak inverse voltage rating of 60,000 volts. Cooling is by convection and radiation.

A single 250R will deliver 160 milliamperes at 24,000 volts to a capacitor-input filter with 21,000 volts single-phase supply. Four 250R's in a bridge circuit will deliver 500 milliamperes at 38,000 volts to a choke-input filter with 42,000 volts single-phase supply.

GENERAL CHARACTERISTICS

ELECTRICAL

Filament: Thoriated Tungsten	
Voltage	5.0 volts
Current	10.5 amperes

MECHANICAL

Base	50-watt jumbo 4-pin bayonet
Basing	Refer to outline drawing
Socket	Refer to discussion under "Application"
Mounting Position	Vertical, base down or up
Cooling	Convection and Radiation
Maximum Temperature of Plate Seal	225°C
Recommended Heat Dissipating Plate Connector	Eimac HR-6
Maximum Over-all Dimensions:	
Length	10.13 inches
Diameter	3.82 inches
Net Weight	10 ounces
Shipping Weight (approx.)	3 pounds

MAXIMUM RATINGS (Per tube)

PEAK INVERSE PLATE VOLTAGE	60,000	MAX. VOLTS
PLATE DISSIPATION	150	MAX. WATTS
D-C PLATE CURRENT[1]	250	MAX. MA
PEAK PLATE CURRENT	2.5	MAX. AMPERES

[1]Averaged over one cycle for each tube. Applies only when the rectifier is coupled to the load by a choke-input filter incorporating the "critical" value (or larger) of input inductance. For maximum d-c current ratings under this and other load conditions see discussion under "Application"

APPLICATION

MECHANICAL

Mounting—The 250R must be mounted vertically with the base either down or up. The lead to the plate terminal of the tube should be flexible.

The 50-watt jumbo 4-pin bayonet base fits an E. F. Johnson Co. No. 123-211, a National Co. No. XM-50, or an equivalent socket. In some circuits, particularly those of the voltage multipliers illustrated in Fig. 2, it may be necessary to mount the socket on stand-off insulators, or on a sheet of insulating material, to provide adequate insulation to ground.

Cooling—The 250R is cooled by convection and radiation. Clearance should be provided around the glass envelope adequate for the free circulation of air. An Eimac HR-6 Heat Dissipating Connector or equivalent is required on the plate terminal.

The maximum temperature at the plate seal must not exceed

(Revised 12-15-65) Copyright 1952, 1965 by Varian Associates

225°C. A convenient accessory for measuring this temperature is "Tempilaq", a temperature-sensitive lacquer available from the Tempil Corporation, 132 W. 22nd St., New York 11, N. Y.

ELECTRICAL

Filament Operation—For maximum tube life, the filament voltage, as measured at the base pins, should be the rated value of 5.0 volts. Variations must be kept within the range from 4.75 to 5.25 volts. In applications which require the diode to deliver high peak currents, it is important to maintain the filament voltage at the rated value.

CAUTION SHOULD BE OBSERVED WHEN MEASURING RECTIFIER FILAMENT VOLTAGE. THE FILAMENT CIRCUIT MAY BE AT HIGH POTENTIAL.

The thoriated-tungsten filament of the 250R reaches operating temperature in a fraction of a second after application of voltage. Plate voltage may be applied simultaneously with filament voltage.

Plate Operation—With low room illumination, the plate of the 250R begins to show color as the maximum plate dissipation rating of 150 watts is approached. The maximum peak inverse voltage rating of 60,000 volts should not be exceeded at any time.

Performance—The accompanying table shows some maximum performance capabilities of the 250R when used as a power-supply rectifier.

250R MAXIMUM-PERFORMANCE CAPABILITIES

Circuit Type	A-C Input Voltage (volts rms)	Capacitor-Input Filter D-C Output Voltage (volts)	Capacitor-Input Filter D-C Output Current (ma)	Choke-Input Filter D-C Output Voltage (volts)	Choke-Input Filter D-C Output Current (ma)
Single-Phase, Half-Wave	21,000	24,000	160	.....	.....
Single-Phase, Full-Wave	21,000[1]	24,000	320	19,000	500
Single-Phase, Bridge	42,000	48,000	320	38,000	500

[1]One-half the transformer secondary voltage.

Maximum D-C Current Ratings—Plate dissipation rather than peak current usually limits the d-c current which the 250R is capable of delivering to the load. Because the plate dissipation associated with a given d-c current depends upon the amount of ripple and its wave-shape, circuit conditions will determine the maximum d-c current rating of the tube.

Choke-Input Filter—The maximum d-c current rating of the 250R is 250 milliamperes when the load incorporates a choke-input filter with the "critical" value (or larger) of input inductance (L_1 in Fig. 1):

$$L_o = \frac{R_{eff}}{18.8f} \quad \text{for full-wave single-phase rectifiers,}$$

$$L_o = \frac{R_{eff}}{75f} \quad \text{for half-wave three-phase rectifiers,}$$

$$L_o = \frac{R_{eff}}{660f} \quad \text{for full-wave three-phase rectifiers,}$$

where: L_o = "critical" value of input inductance (henries),
f = supply-line frequency (cycles per second),

$$R_{eff} = \frac{\text{Load voltage (volts)}}{\text{Load current (amps)}}.$$

Choke-input filters are not normally used with single-phase half-wave rectifiers.

Capacitor-Input Filter—The 250R is particularly suitable for power-supply applications demanding high voltage at low current. Under these conditions capacitor-input filter circuits become desirable. The maximum d-c current rating of the 250R when no input choke is incorporated in the filter depends upon the total series resistance of the capacitor-charging circuit relative to the effective load resistance seen by each tube. The circuit diagrams and tabulation in Fig. 2 are so arranged and labeled that this required series resistance may be found for a wide range of load conditions. This may be done by determining the value of the following quantities:

E_c is the filter-input d-c voltage. While this is usually the entire load voltage, in the case of voltage multipliers it is the load voltage divided by the multiplication factor.

I_p is the d-c current per tube. This is the entire load current only in the case of the simple half-wave rectifier or half- or full-wave multiplier. In the case of full-wave center-tapped or bridge rectifiers, I_p is half the load current.

R_c is the total charging-circuit resistance. A certain minimum value of charging-circuit resistance is necessary to limit the peak value of current to which the tubes will be subjected under given load conditions. This required minimum depends upon the d-c current per tube (I_p), and has been tabulated in Fig. 2 as a percentage of the effective load resistance per tube (E_c/I_p). The total charging-circuit resistance involves the internal resistance of the rectifier tube, R_p, the added series resistor, R_s, and the equivalent internal resistance of the a-c voltage supply, R_i.

R_p is the plate resistance of the 250R, which may be taken as 750 ohms.

R_i is the equivalent internal resistance of the supply. This may be taken as the regulation of the high-voltage supply expersed as a decimal multiplied by the load resistance used in measuring this regulation.

R_s is the series resistor which must be inserted in the charging circuit to bring the total charging-circuit resistance up to the required minimum. Its value may be found from the formula associated with each of the circuits of Fig. 2. This resistor must be inserted in such a position in the circuit that it protects all tubes.

Tubes may be operated in parallel to increase the output capability in a given circuit. When two tubes are placed in parallel at each place where one is shown in the circuits of Fig. 2, the plate resistance (R_p) will be half as great and the maximum allowable load current twice as great as indicated.

Peak Inverse Voltage—The peak inverse voltage rating of the 250R is 60,000 volts. In single-phase power-supply rectifier circuits the peak inverse voltage to be used in design is the peak a-c supply voltage (1.41 times E_{rms} in Fig. 2) in the case of bridge circuits, and twice this value in the case of half- and full-wave rectifiers and voltage multipliers. Peak inverse voltage in three-phase operation depends upon the circuit employed, and will be found listed in the handbooks.

Special Applications—The ratings given for capacitor-input filter circuits assume values of input capacitance large enough to hold the ripple to a low value. In special applications where a larger percent ripple is tolerable, and filter capacitance is low, the 250R is capable of larger d-c output currents.

As a unidirectional conductor in d-c circuits where the current is continuous and the percent ripple is moderate, the maximum current rating of the 250R is 400 milliamperes.

The plate characteristic curve for the 250R serves as a guide to special applications. The maximum plate dissipation rating of 150 watts, the maximum peak inverse voltage rating of 60,000 volts, and the maximum peak plate current of 2.5 amperes must not be exceeded.

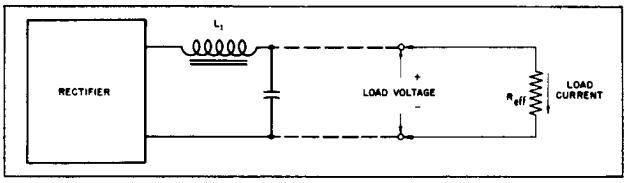

Fig. 1. Rectifier with Choke-Input Filter

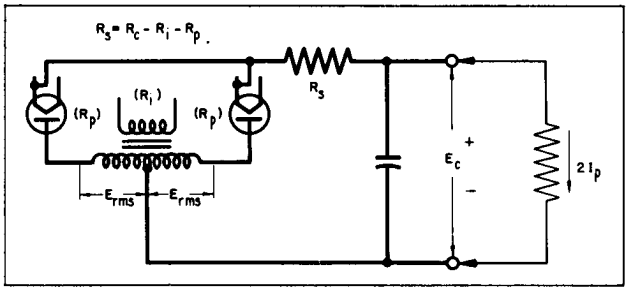

a. Full-Wave Center-Tapped Rectifier

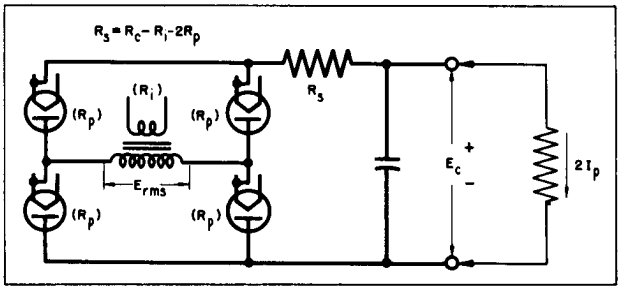

b. Full-Wave Bridge Rectifier

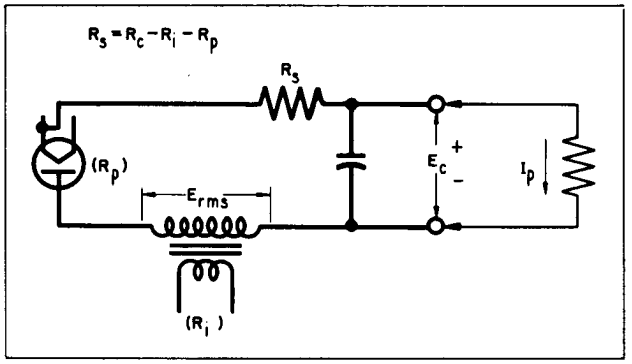

c. Half-Wave Rectifier

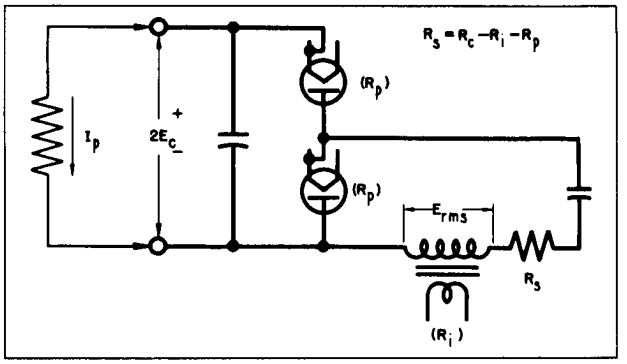

d. Half-Wave Voltage Doubler

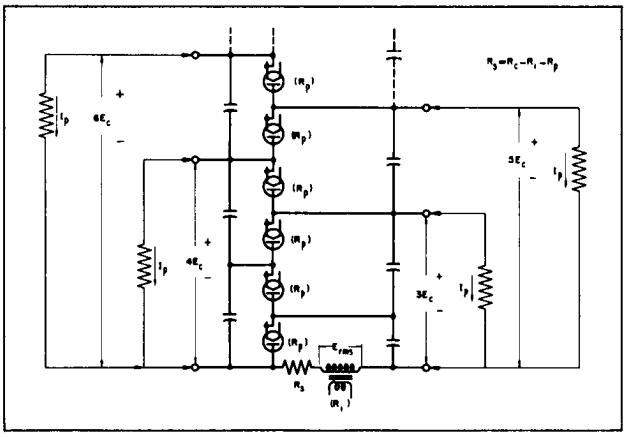

e. Half-Wave Voltage Multiplier (with common ground when R_s is inserted on the "high" side of E_{rms})

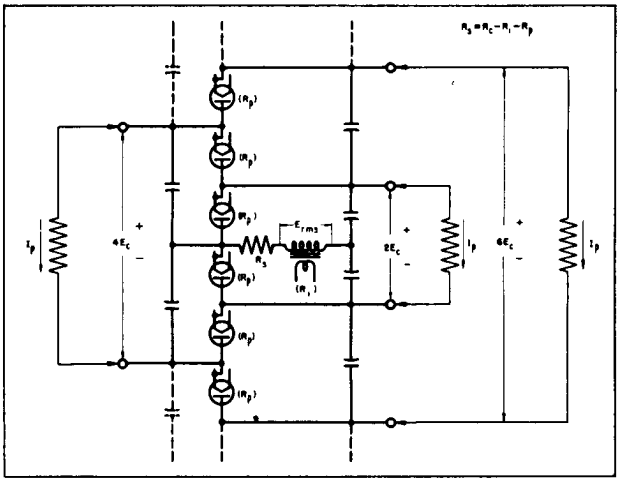

f. Full-Wave Voltage Multiplier

Eimac 250R Maximum D-C Current Ratings for R-C Filter Applications								
D-C Plate Current (I_p)	140	150	160	170	180	190	200	milliamperes per tube
Total Charging-Circuit Resistance (R_c)	1.2	1.9	3.0	4.8	7.6	12	19	percent of Effective Load Resistance per Tube (E_c/I_p)
A-C Supply Voltage (E_{rms})	0.80	0.83	0.87	0.93	1.01	1.14	1.33	times Filter-Input D-C Voltage (E_c)
Peak Inverse Voltage (½ these values for circuit b.)	2.3	2.4	2.5	2.7	2.9	3.2	3.7	times Filter-Input D-C Voltage (E_c)

Fig. 2 Eimac 250R Basic R-C Circuits (for any one of the indicated loads)

R_i = Equivalent resistance of voltage source

R_p = 750 ohms (375 ohms for two tubes in parallel)

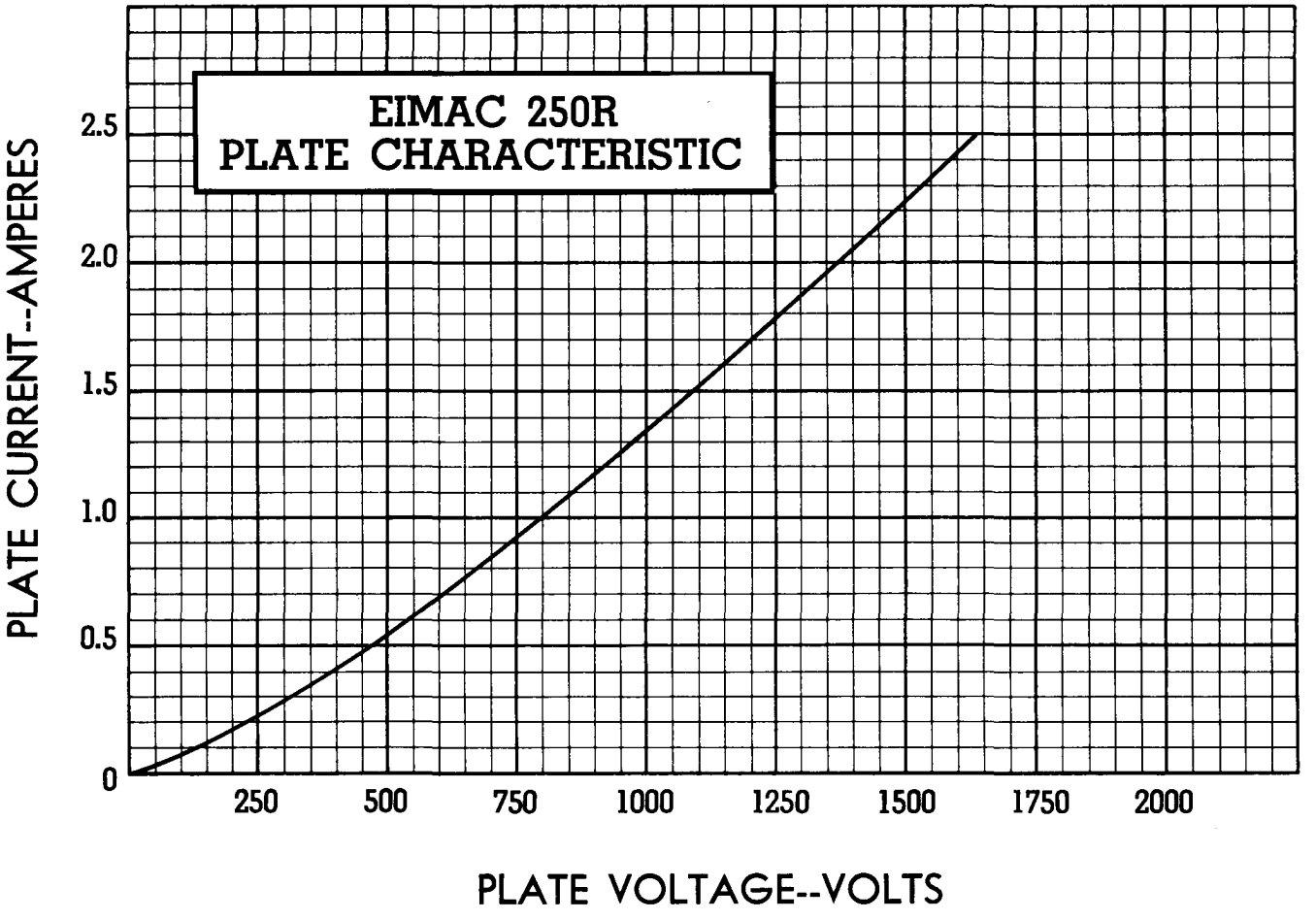

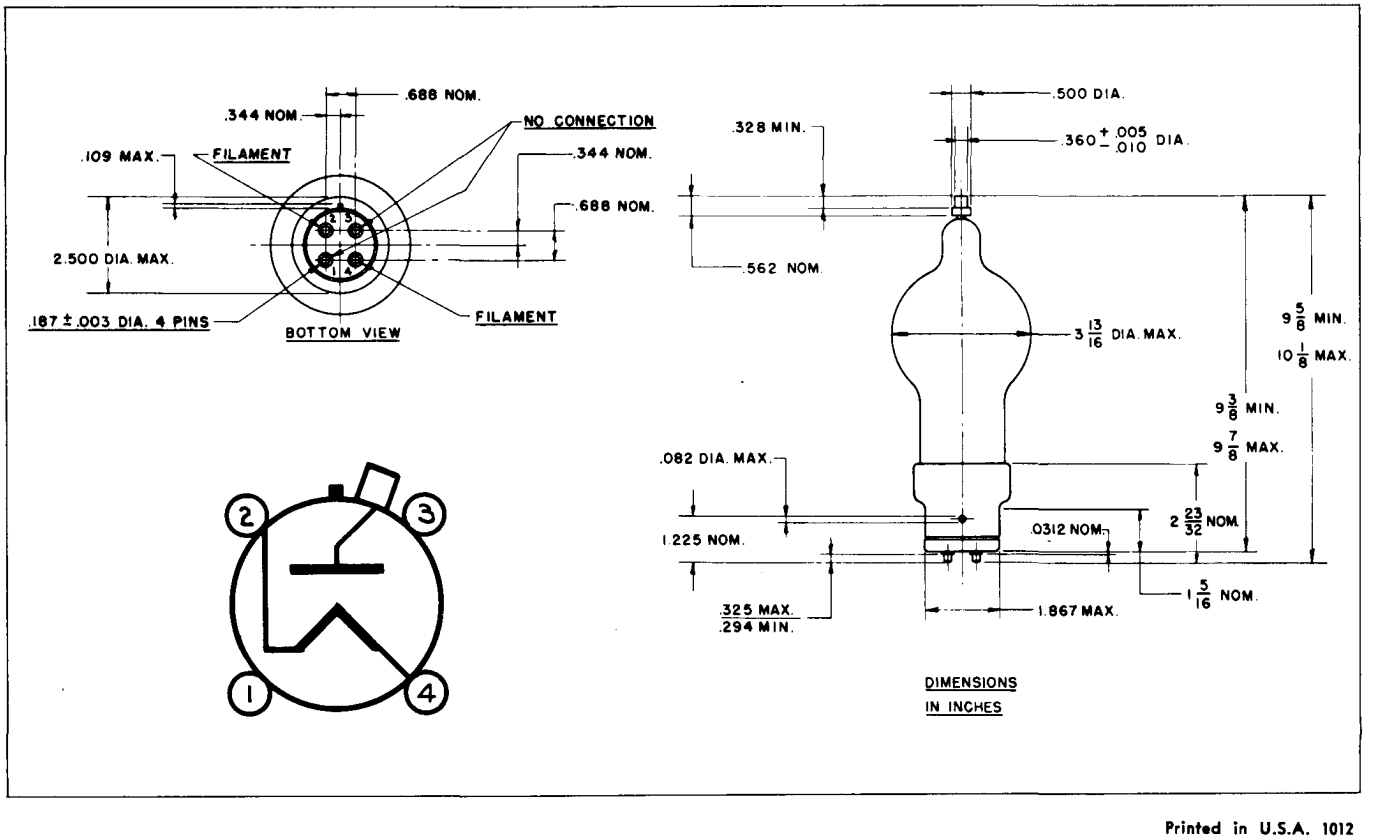

Printed in U.S.A. 1012