SYLVANIA

engineering data service

SYLVANIA

24CP4

24CP4A

CHARACTERISTICS

GENERAL DATA

Focusing Method	Magnetic
Deflecting Method	Magnetic
Deflection Angle (approx.)	
Horizontal	85 Degrees
Diagonal	90 Degrees
Phosphor	P4
Fluorescence	White
Persistence	Medium
Faceplate	Gray Filter Glass
Light Transmittance (approx.)	68 Percent

ELECTRICAL DATA

Heater Voltage	6.3 Volts
Heater Current (approx.)	0.6 Ampere
Direct Interelectrode Capacitances (approx.)	
Cathode to All Other Electrodes	5 $\mu\mu f$
Grid No. 1 to All Other Electrodes	6 $\mu\mu f$
External Conductive Coating to Anode[1]	750 $\mu\mu f$ Max.
	500 $\mu\mu f$ Min.
Ion Trap Magnet	External, Single Field Type

MECHANICAL DATA

Minimum Useful Screen Dimensions	21¼ x 16¾ Inches
Bulb Contact (Recessed Small Cavity Cap)	J1-21
Base (Small Shell Duodecal 5-Pin)	B5-57
Basing	12N

RATINGS

MAXIMUM RATINGS (Design Center Values)

Anode Voltage	20,000 Volts dc
Grid No. 2 Voltage	500 Volts dc
Grid No. 1 Voltage	
Negative Bias Value	125 Volts dc
Positive Bias Value	0 Volts dc
Positive Peak Value	2 Volts
Peak Heater-Cathode Voltage	
Heater Negative with Respect to Cathode	
During Warm-up Period Not to Exceed 15 Seconds	410 Volts
After Equipment Warm-up Period	180 Volts
Heater Positive with Respect to Cathode	180 Volts

RECOMMENDED OPERATING CONDITIONS

Anode Voltage	18,000 Volts dc
Grid No. 2 Voltage	300 Volts dc
Grid No. 1 Voltage Required for Cutoff[2]	-28 to -72 Volts dc
Focusing Coil Current[3]	125 ± 20% Ma dc
Ion Trap Magnet Strength (approx.)	40 Gausses

CIRCUIT VALUES

Grid No. 1 Circuit Resistance	1.5 Megohms Max.

NOTES:

1. *External Conductive Coating must be grounded.*
2. *Visual extinction of focused raster. Extinction of stationary focused spot will require that these values be about 5 volts more negative.*
3. *For JETEC focusing coil 109 or equivalent three inches from reference line, bias adjusted to 30 foot lamberts on a 21¼ x 15¾ inch picture area sharply focused at center of screen.*

QUICK REFERENCE DATA

Television Picture Tube
24" Direct Viewed
Rectangular Glass Type
Spherical Faceplate
Gray Filter Glass
Magnetic Deflection
Magnetic Focus
Single Field Ion Trap
External Conductive Coating
(24CP4A has an Aluminized Screen)

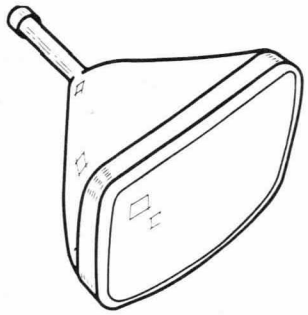

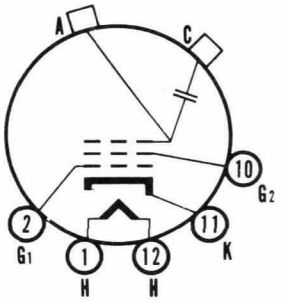

12-N

SYLVANIA ELECTRIC PRODUCTS INC.

TELEVISION PICTURE TUBE DIVISION
SENECA FALLS, NEW YORK

Prepared and Released By The TECHNICAL PUBLICATIONS SECTION EMPORIUM, PENNSYLVANIA

OCTOBER 1953

SYLVANIA

24CP4

24CP4A

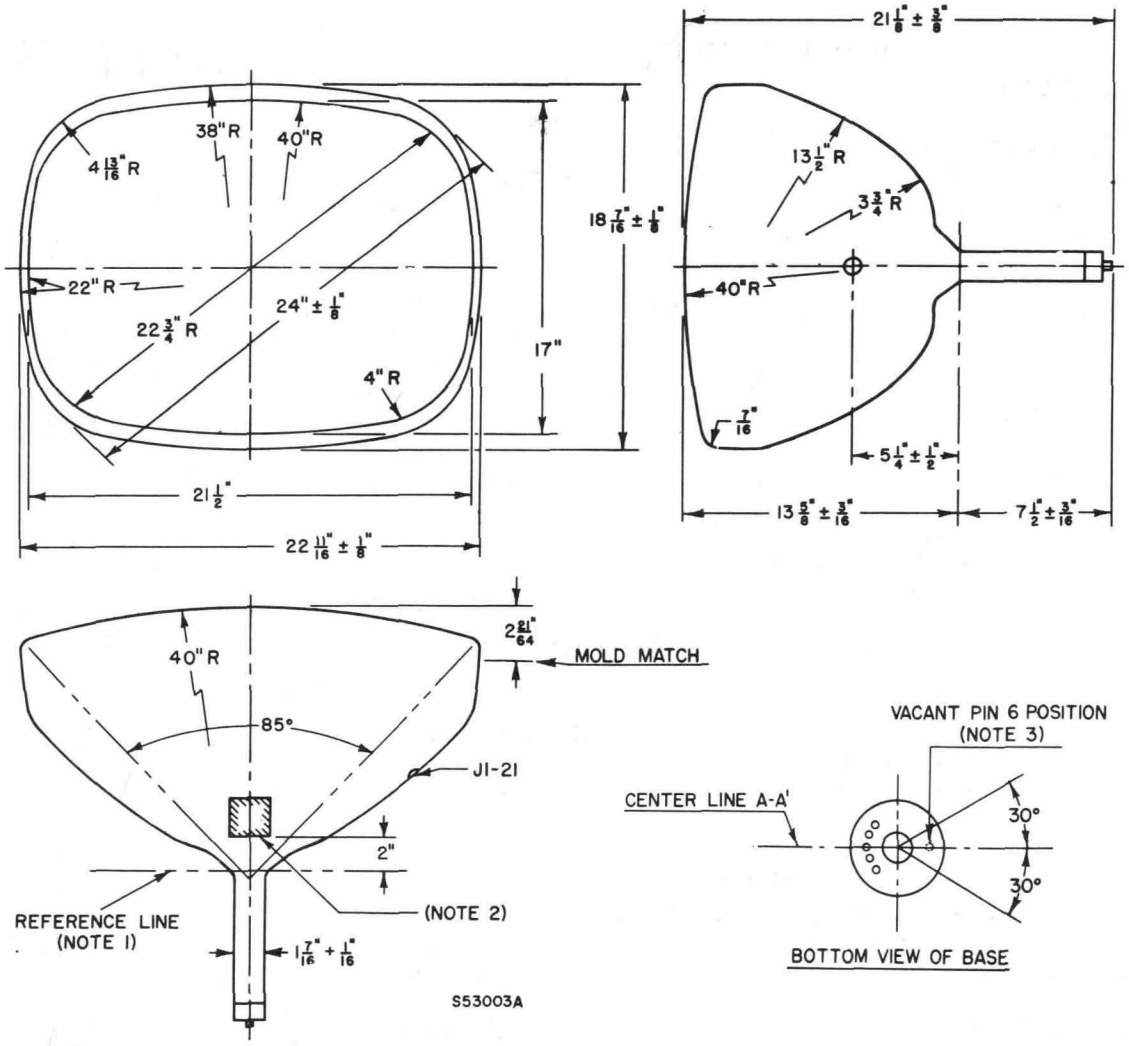

DIAGRAM NOTES:

1. *Reference line is determined by the plane C-C1 of the reference line gauge (JETEC No. 110) when the gauge is resting on the glass cone. The neck diameter near the cone may exceed 1.500" but is limited by the internal contour of the yoke reference line gauge.*
2. *In the interest of reducing the number of potential types due to different external coating shapes; only the 2" x 2" contact point is defined on the picture tube as shown in the drawing. The external coating may take any configuration above the reference line to produce the desired capacitance.*
3. *Anode contact aligns with vacant pin position No. 6 ± 30 degrees.*

24CP4A

The Sylvania Type 24CP4A is identical to Type 24CP4 except it has an aluminized screen.

The aluminized screen of Type 24CP4A increases its picture brightness and contrast. While the 18 kv operating condition is recommended for optimum picture quality, this type will operate satisfactorily at substantially lower voltages.

WARNING:

X-ray radiation shielding may be necessary to protect against possible danger of personal injury from prolonged exposure at close range if this tube is operated at higher than the manufacturer's Maximum Rated Anode Voltage or 16,000 volts, whichever is less.