# CHARACTERISTICS

## GENERAL DATA

| | |
|---|---|
| Focusing Method | Electrostatic |
| Deflecting Method | Magnetic |
| Deflection Angle | |
| Horizontal | 85 Degrees |
| Diagonal | 90 Degrees |
| Phosphor | Aluminized P4 |
| Fluorescence | White |
| Persistence | Short to Medium |
| Faceplate | Gray Filter Glass |
| Light Transmittance (approx.) | 74 Percent |

## ELECTRICAL DATA

| | |
|---|---|
| Heater Voltage | 6.3 Volts |
| Heater Current | 0.6 ± 5% Ampere |
| Heater Warm-up Time[1] | 11 Seconds |
| Direct Interelectrode Capacitances (approx.) | |
| Cathode to All Other Electrodes | 5 μμf |
| Grid No. 1 to All Other Electrodes | 6 μμf |
| External Conductive Coating to Anode[2] | 2500 μμf Max. |
| | 1700 μμf Min. |
| Ion Trap Magnet | External, Single Field Type |

## MECHANICAL DATA

| | |
|---|---|
| Minimum Useful Screen Dimensions | $21\frac{7}{16}$" x $16\frac{7}{8}$" Inches |
| Minimum Useful Screen Area | 332 Sq. Inches |
| Bulb | J192A or J192B |
| Bulb Contact (Recessed Small Cavity Cap) | J1-21 |
| Base (Small Shell Duodecal 6-Pin) | B6-63 |
| Basing | 12L |

# RATINGS

## MAXIMUM RATINGS (Absolute Maximum Values)

| | | |
|---|---|---|
| Anode Voltage | 22,000 | Volts dc |
| Grid No. 4 Voltage (Focusing Electrode) | —550 to +1100 | Volts dc |
| Grid No. 2 Voltage | 550 | Volts dc |
| Grid No. 1 Voltage | | |
| Negative Bias Value | 155 | Volts dc |
| Negative Peak Value | 220 | Volts |
| Positive Bias Value | 0 | Volts dc |
| Positive Peak Value | 2 | Volts |
| Peak Heater-Cathode Voltage | | |
| Heater Negative with Respect to Cathode | | |
| During Warm-up Period not to Exceed 15 Seconds | 450 | Volts |
| After Equipment Warm-up Period | 200 | Volts |
| Heater Positive with Respect to Cathode | 200 | Volts |

## TYPICAL OPERATING CONDITIONS

| | | |
|---|---|---|
| Anode Voltage | 18,000 | Volts dc |
| Grid No. 4 Voltage | —72 to +396 | Volts dc |
| Grid No. 2 Voltage | 300 | Volts dc |
| Grid No. 1 Voltage Required for Cutoff[3] | —35 to —72 | Volts dc |
| Ion Trap Magnet Current (Average)[4] | 33 | Ma dc |
| Field Strength of PM Ion Trap Magnet[5] | 37 | Gausses Min. |

## CIRCUIT VALUES

| | | |
|---|---|---|
| Grid No. 1 Circuit Resistance | 1.5 | Megohms Max. |

## QUICK REFERENCE DATA

Television Picture Tube
24" Direct Viewed
Rectangular Glass Type
Spherical Faceplate
Gray Filter Glass
Magnetic Deflection
Electrostatic Focus
Single Field Ion Trap
External Conductive Coating
Aluminized Screen

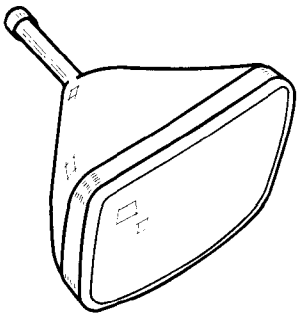

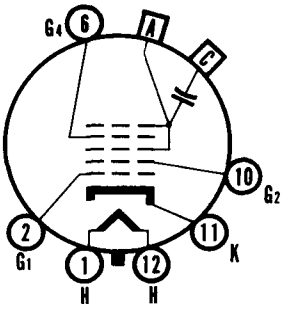


12-L

SYLVANIA ELECTRIC PRODUCTS INC.
TELEVISION PICTURE TUBE DIVISION
SENECA FALLS, NEW YORK

*Prepared and Released By The TECHNICAL PUBLICATIONS SECTION EMPORIUM, PENNSYLVANIA*

APRIL, 1958

## NOTES:

1. *Heater warm-up time is defined as the time required for the voltage across the heater to reach 80% of its rated value after applying four (4) times rated heater voltage to a circuit consisting of the tube heater in series with a resistance equal to three (3) times rated heater voltage divided by rated heater current.*
2. *External conductive coating must be grounded.*
3. *Visual extinction of focused raster. Extinction of stationary focused spot will require that these values be about 5 volts more negative.*
4. *For JETEC Ion Trap Magnet No. 117 with pole pieces centered over Grid No. 2 on mount and rotated for maximum brightness.*
5. *For typical PM ion trap magnet with field strength tolerance of ±3 gausses.*

## WARNING:

*X-ray radiation shielding may be necessary to protect against possible danger of personal injury from prolonged exposure at close range if this tube is operated at higher than the manufacturer's Maximum Rated Anode Voltage or 16,000 volts, whichever is less.*

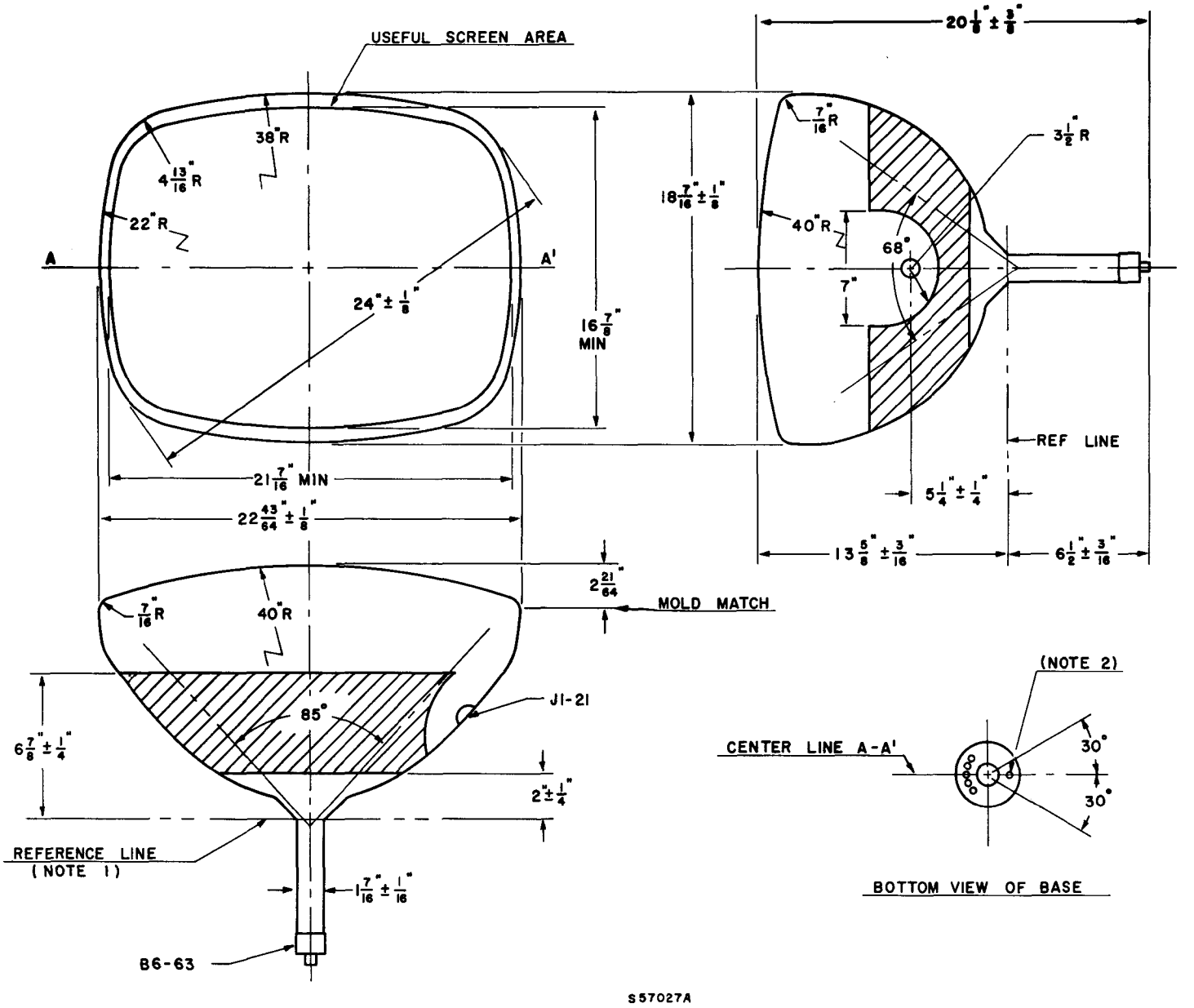


## DIAGRAM NOTES:

1. *Reference line is determined by the plane C-C' of the reference line gauge (JETEC No. 116) when the gauge is resting on the glass cone.*
2. *Pin No. 6 aligns with horizontal centerline of tube within 30° and is on same side as anode contact.*

*A Technical Publication of*

SYLVANIA ELECTRIC
PRODUCTS INC.

EMPORIUM, PA.