EIMAC

A Division of Varian Associates

SAN CARLOS, CALIFORNIA

2-450A

HIGH-VACUUM RECTIFIER

The Eimac 2-450A is a high-vacuum diode rectifier intended for use in rectifier units, voltage multipliers, or in special applications where high peak-inverse voltages, extreme temperatures, high operating frequency, or the production of high-frequency transients would prevent the use of mercury-vapor or gas-filled rectifier tubes.

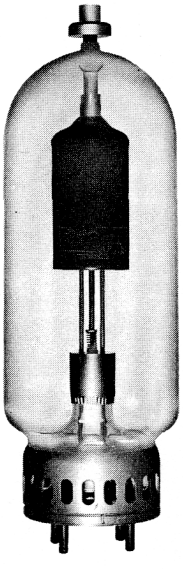

CHARACTERISTICS

ELECTRICAL

		Min.	*Nom.*	*Max.*	
Filament:	Thoriated Tungsten				
	Voltage		7.5		volts
	Current	25.0		28.0	amperes

MECHANICAL

Base	4-pin, metal shell
Socket	E. F. Johnson Co. 124-214 or equivalent
Operating Position	vertical, base down or up
Recommended Plate Connector	Eimac HR-8
Maximum Operating Temperatures:	
Plate Seal	225°C
Envelope	250°C
Net Weight	2.4 pounds
Shipping Weight (approximate)	9 pounds

COOLING

The temperature of the plate seal and envelope must not be allowed to exceed 225°C and 250°C respectively. When several tubes are being operated in the same compartment and at or near maximum rated plate dissipation, forced-air cooling is required. In any event, it should be remembered that the listed temperatures are maximums and that lower operating temperatures will result in longer life and improved reliability. The use of a temperature-sensitive paint, sparingly applied in the referenced areas, is recommended to determine the effectiveness of the cooling employed in any given installation.

MAXIMUM RATINGS

Peak Inverse Plate Voltage	30,000 MAX. VOLTS
Plate Dissipation	450 MAX. WATTS
D-C Plate Current	1 MAX. AMPERE
Peak Plate Current	8 MAX. AMPERES

MAXIMUM POWER-SUPPLY CAPABILITIES*

Circuit	Maximum A-C Input Voltage (volts rms)	Approx. D-C Output Voltage (volts)	Maximum D-C Output Current (amps)
Single-Phase, Full-Wave (2 tubes)	21,200 total	9,300	2.0
Single-Phase, Bridge (4 tubes)	21,200 total	18,600	2.0
Three-Phase, Full-Wave (6 tubes)	12,250 per leg	28,000	3.0

*Choke-input filter with L equal to or greater than twice "critical"; zero circuit loss assumed; tube drop considered.

CHOKE-INPUT FILTER

The maximum d-c current rating of the 2-450A is 1.0 amperes when the load incorporates a choke-input filter with the "critical" value (or larger) of input inductance. This value may be calculated from the appropiate formula below:

$$L_o = \frac{R_{eff}}{18.8f} \left\{ \begin{array}{l} \text{for full-wave} \\ \text{single wave} \\ \text{power supplies} \end{array} \right. \qquad L_o = \frac{R_{eff}}{75f} \left\{ \begin{array}{l} \text{for half-wave} \\ \text{three-phase} \\ \text{power supplies} \end{array} \right. \qquad L_o = \frac{R_{eff}}{660f} \left\{ \begin{array}{l} \text{for full-wave} \\ \text{three-phase} \\ \text{power supplies} \end{array} \right.$$

where: L_o = "critical" value of input inductance (henries) f = supply-line frequency (cycles per second)

$$R_{eff} = \frac{\text{Load voltage (volts)}}{\text{Load current (amps)}}$$

THESE SPECIFICATIONS ARE BASED ON DATA APPLICABLE AT PRINTING DATE. SINCE EIMAC HAS A POLICY OF CONTINUING PRODUCT IMPROVEMENT, SPECIFICATIONS ARE SUBJECT TO CHANGE WITHOUT NOTICE.

(Revised 3-1-66) Copyright 1959, 1966 by Varian Associates

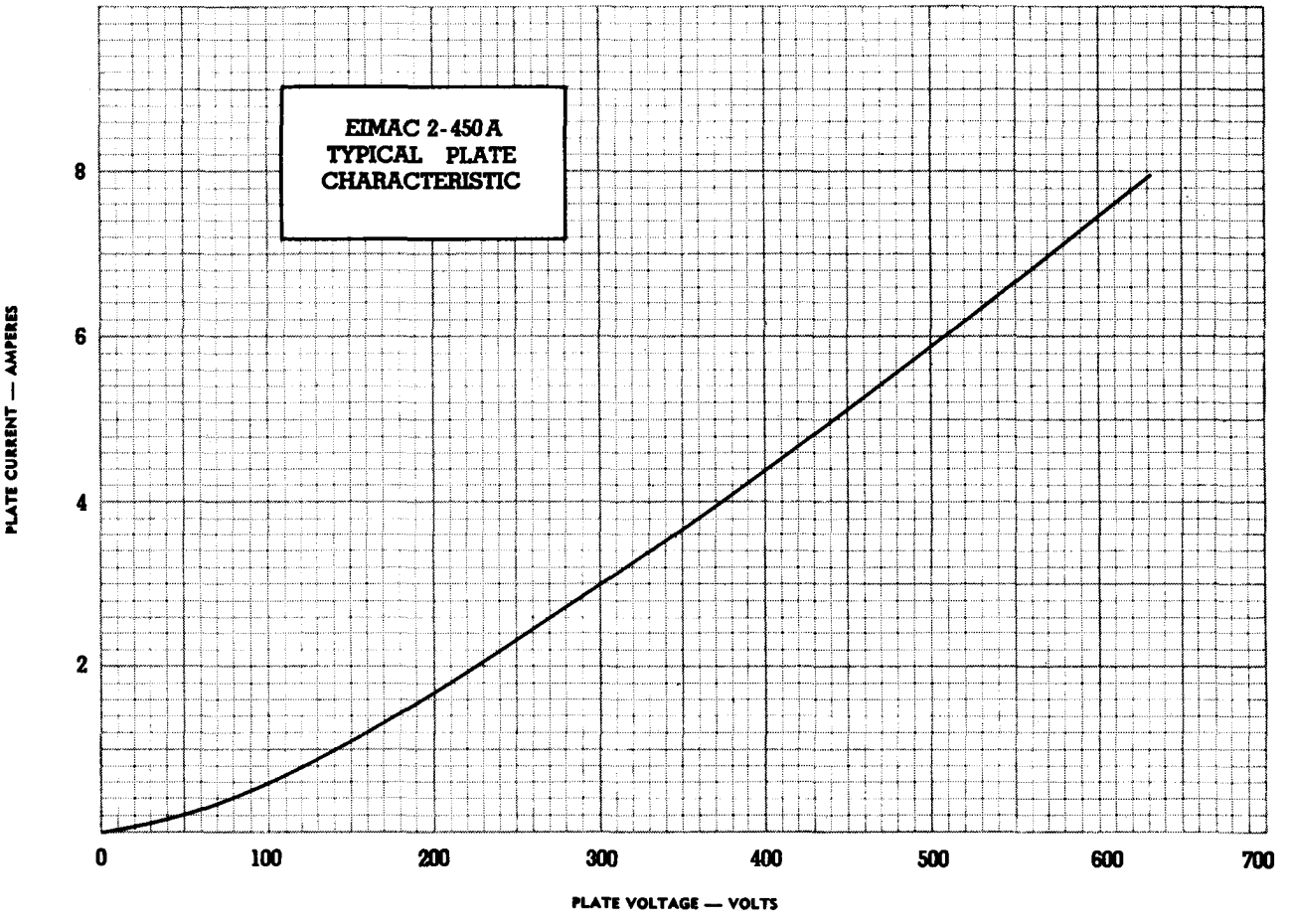

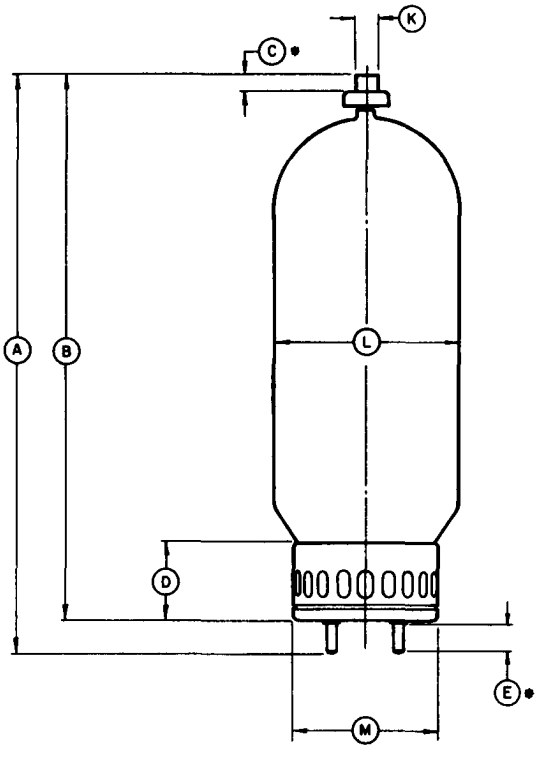

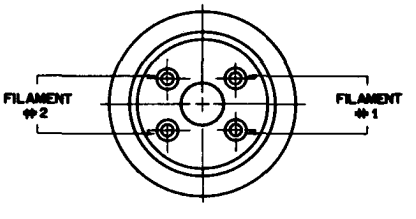

DIMENSION DATA			
REF.	NOM.	MIN.	MAX.
A		13 1/8	14 1/8
B		12 1/4	13 1/4
C		.445	.465
D	1 3/4		
E		.662	.712
F		.610	.640
G		1.235	1.265
H		.829	.859
J		1.672	1.702
K		.558 DIA.	.568 DIA.
L			4 5/8 DIA.
M			3 5/8 DIA.
N		.247 DIA.	.251 DIA.

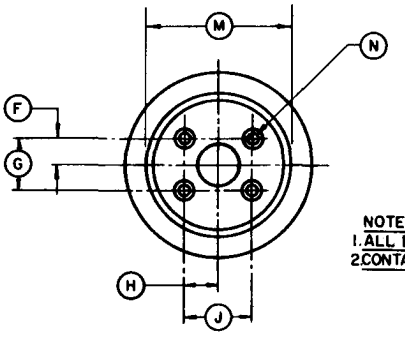

NOTES:
1. ALL DIMENSIONS IN INCHES.
2. CONTACT SURFACE (*).

Printed in U.S.A. 82587