23DWP4

CATHODE RAY TUBE

23 INCH, RECTANGULAR, GLASS

FACEPLATE--SPHERICAL GRAY

FOCUS--ELECTROSTATIC

NON ION TRAP GUN

DEFLECTION--MAGNETIC

ALUMINIZED SCREEN

94 DEGREE DEFLECTION ANGLE

EXTERNAL CONDUCTIVE COATING

INTEGRAL IMPLOSION PROTECTION

----------DESCRIPTION AND RATING----------

The 23DWP4 is a 23 inch electrostatic-focus and magnetic deflection glass lightweight picture tube equipped with banded tube - coated funnel type integral implosion protection. Outstanding features include a small neck diameter and a non ion trap gun. The fluorescent screen is aluminized to increase light output and reduce undesirable screen charging. An external conductive coating is provided to serve as a filter capacitor when grounded.

ELECTRICAL DATA

Focusing Method	Electrostatic
Deflection Angle, Approximate	
Horizontal	82 degrees
Vertical	68 degrees
Diagonal	94 degrees
Direct Interelectrode Capacitance	
Cathode to all other electrodes, approx.	5 μμf
Grid #1 to all other electrodes, approx.	6 μμf
External Conductive Coating to Anode	2500 max. μμf
(including implosion protection hardware)	2000 min. μμf
Heater Current at 6.3 volts	600 ± 30 ma.
Heater Warm-Up Time	11 sec.

OPTICAL DATA

Phosphor Number	P4 Aluminized
Light Transmittance at Center, approx.	42 Percent

CATHODE RAY TUBE DEPARTMENT

GENERAL ELECTRIC

Syracuse, N. Y.

from JEDEC release #4302, June 17, 1963

MECHANICAL DATA

Overall Length	17 3/16 ± 5/16 inches
Greatest Dimensions of Tube	
Diagonal	23 1/2 ± 1/8 inches
Width	20 5/8 ± 1/8 inches
Height	16 5/8 ± 1/8 inches
Minimum Useful Screen Dimensions (Projected)	
Diagonal	22 5/16 inches
Horizontal Axis	19 1/4 inches
Vertical Axis	15 1/8 inches
Area	282 square inches
Neck Length	5 1/8 ± 1/8 inches
Bulb	J187 M1
Bulb Contact	JEDEC No. J1-21
Base	JEDEC No. B7-208
Basing	8HR
Bulb Contact Alignment	
Anode Contact Aligns with base pin No. 4 ± 30 degrees	

RATINGS (Design Maximum System)

Unless otherwise specified, voltage values are positive and measured with respect to cathode.

Maximum Anode Voltage	22,000 volts
Minimum Anode Voltage	15,000 volts
Maximum Grid #4 (Focusing Electrode) Voltage	-500 to +1000 volts
Minimum Grid #2 Voltage	100 volts
Maximum Grid #2 Voltage	400 volts
Grid #1 Voltage	
Maximum Negative Value	140 volts DC
Maximum Negative Peak Value	200 volts
Maximum Positive Value	0 volts DC
Maximum Positive Peak Value	2 volts
Maximum Heater Voltage	6.9 volts
Minimum Heater Voltage	5.7 volts

Maximum Heater-Cathode Voltage
Heater negative with respect to cathode
During warm-up period not to exceed 15 sec . . . . 410 volts
After equipment warm-up period . . . . . 300 volts
Heater positive with respect to cathode. . . . . 180 volts

TYPICAL OPERATING CONDITIONS (Cathode Drive Service)

Anode Voltage	18,000 volts DC
Grid #4 Voltage (Focusing Electrode-Notes 2 & 3) . . .	250 volts DC
Grid #2 Voltage.	200 volts DC
Cathode to Grid #1 Voltage (Note 1).	31 to 49 volts DC

MAXIMUM CIRCUIT VALUES

Maximum Grid #1 Circuit Resistance	1.5 max. megohm
Grid #2 Circuit Resistance	0.1 min. megohm
Focusing Electrode Circuit Resistance.	0.1 min. megohm

Protective resistance in Grid #2 and focusing electrical circuits is advisable to prevent damage to tube. If applicable, one resistor common to both circuits may be used.

NOTES:

1. Visual extinction of focused raster.

2. With the combined Grid #1 bias voltage and video-signal voltage adjusted to give an anode current of 150 μa on a 19 1/4" x 15 1/8" pattern from RCA 2F21 monoscope or equivalent.

3. Individual tubes will have satisfactory focus at some value between 0 and 500 volts.

23 DWP4

SCREEN DIMENSIONS
DIAGONAL — 22 5/16
WIDTH — 19 1/4
HEIGHT — 15 1/8
AREA — 282 SQ. IN.

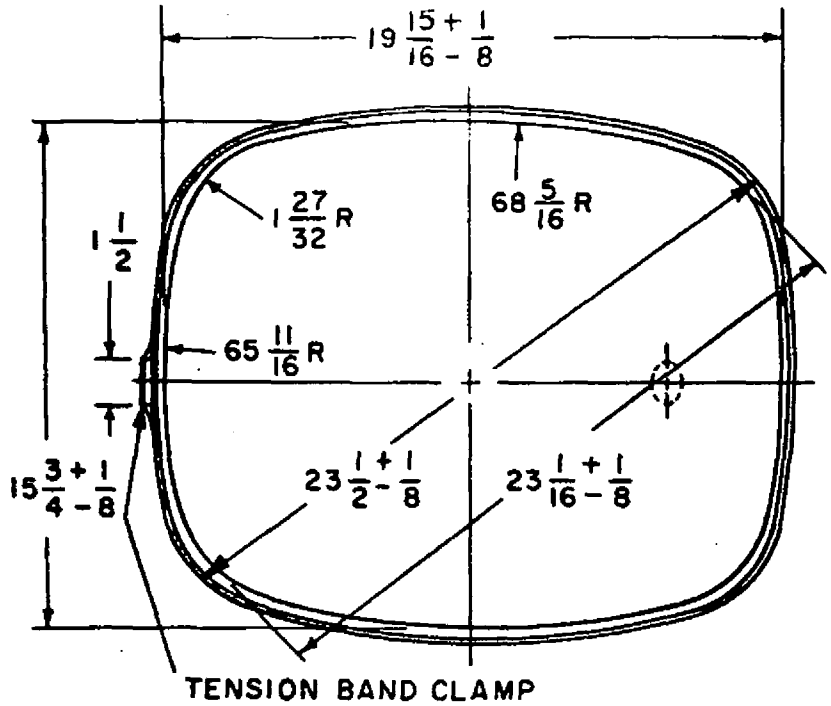

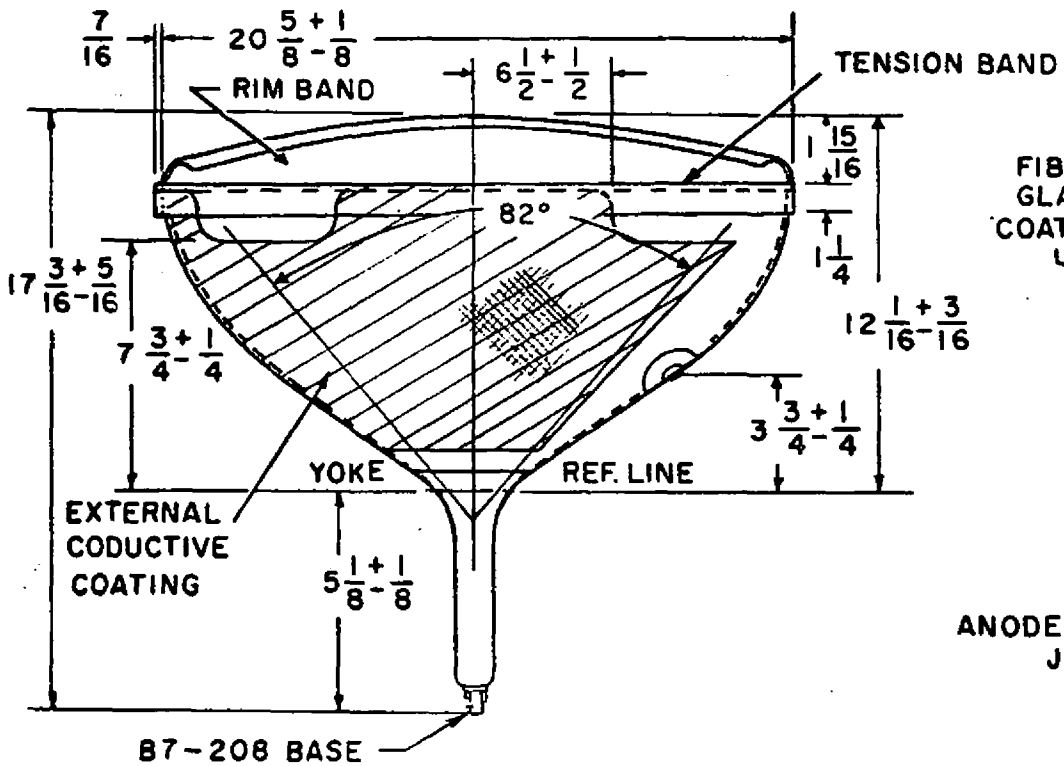

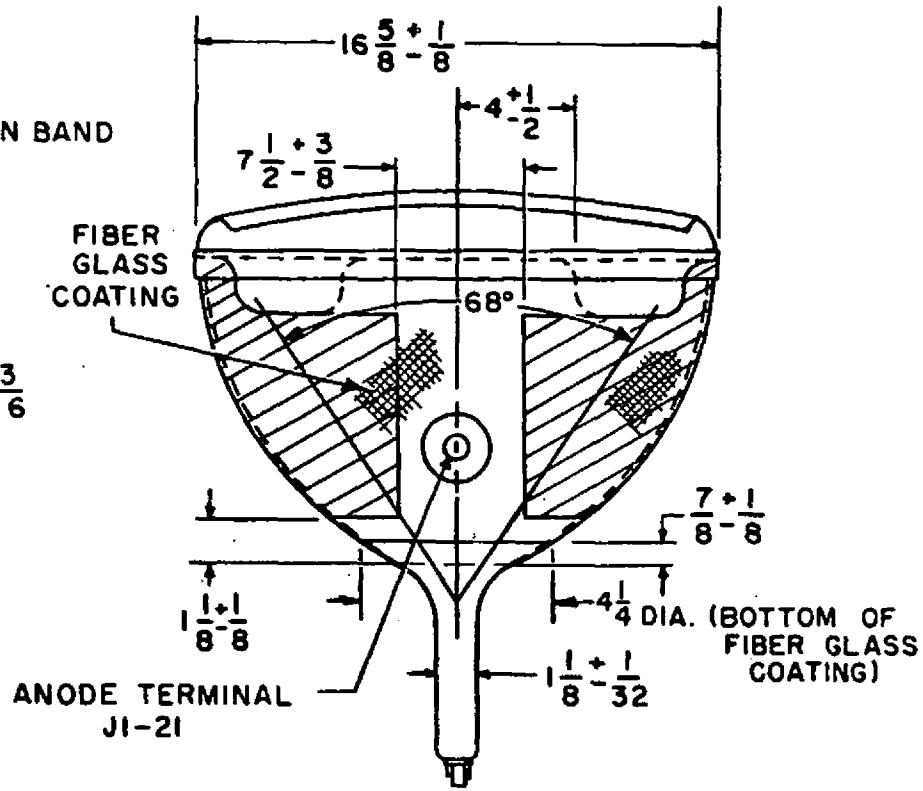

OUTLINE NOTES

1. The reference line is determined by the intersection of the plane C-C of gage (EIA No. 126) with the glass funnel.

2. Deflection angle on the diagonal is 94°.

3. Anode terminal aligns with pin no. 4 ±30 degrees.

4. Use a non-rigidly mounted socket with flexible leads. Bottom circumference of base wafer will fall within 1-3/4 inch diameter circle concentric with the bulb axis.

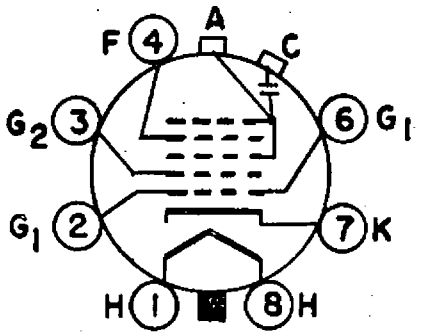

BASING DIAGRAM
8 HR