SYLVANIA

# engineering data service

SYLVANIA
# 23DVP4
# 23DZP4

## CHARACTERISTICS

### GENERAL DATA

| | |
|---|---|
| Focusing Method | Electrostatic |
| Deflection Method | Magnetic |
| Deflection Angles (Approx.) | |
| Horizontal | 100 Degrees |
| Diagonal | 114 Degrees |
| Vertical | 83 Degrees |
| Phosphor | Aluminized P4 |
| Fluorescence | White |
| Persistence | Medium Short |
| Faceplate | Gray Filter Glass |
| Light Transmittance (Approx.) | 42 Percent |

Types 23DVP4 and 23DZP4 are similar to Types 23MP4 and 23ALP4 respectively, except that they employ the banded tube with coated funnel construction for integral implosion protection, and have reduced faceplate transmittance.

### ELECTRICAL DATA

| | 23DZP4 | 23DVP4 | |
|---|---|---|---|
| Heater Voltage | 6.3 | 6.3 Volts | |
| Heater Current ± 5 % | 0.45 | 0.60 Ampere | |
| Heater Warm-up Time[1] | 11 | 11 Seconds | |
| Direct Interelectrode Capacitances (Approx.) | | | |
| Cathode to All Other Electrodes | | 5 pf | |
| Grid No. 1 to All Other Electrodes | | 6 pf | |
| External Conductive Coating and Rim Band to Anode[2] | | 2500 pf | Max. |
| | | 1700 pf | Min. |

### MECHANICAL DATA

| | |
|---|---|
| Minimum Useful Screen Dimensions (Maximum Assured) | |
| Height | 15⅛ Inches |
| Width | 19¼ Inches |
| Diagonal | 22 5/16 Inches |
| Minimum Useful Screen Area | 282 Sq. Inches |
| Neck Length | 5⅛ ± ⅛ Inches |
| Overall Length | 14 7/16 ± 5/16 Inches |
| Bulb Contact (Recessed Small Cavity Cap) | J1-21 |
| Bulb | J187L |
| Base | B7-208 |
| Basing | 8HR |
| Weight (Approx.) | 28 Pounds |

## RATINGS

### MAXIMUM RATINGS (Design Maximum Values)

| | | |
|---|---|---|
| **Grid Drive Service[3]** | | |
| Maximum Anode Voltage | 22,000 Volts | dc |
| Minimum Anode Voltage | 11,000 Volts | dc |
| Grid No. 4 Voltage (Focusing Electrode) | −550 to +1100 Volts | dc |
| Maximum Grid No. 2 Voltage | 550 Volts | dc |
| Minimum Grid No. 2 Voltage | 200 Volts | dc |
| Grid No. 1 Voltage | | |
| Negative Bias Value | 155 Volts | dc |
| Negative Peak Value | 220 Volts | |
| Positive Bias Value | 0 Volt | dc |
| Positive Peak Value | 2 Volts | |
| Peak Heater-Cathode Voltage | | |
| Heater Negative with Respect to Cathode During Warm-up Period Not to Exceed 15 Seconds | 450 Volts | |
| After Equipment Warm-up Period | 200 Volts | |
| Heater Positive with Respect to Cathode | 200 Volts | |

## QUICK REFERENCE DATA

Television Picture Tube
23″ Direct Viewed
Rectangular Glass Type
Gray Filter Glass
Aluminized Screen
Electrostatic Focus
114° Magnetic Deflection
1⅛″ Neck Diameter
No Ion Trap
External Conductive Coating
Banded Tube, Coated Funnel
23DVP4: 6.3v/600 ma Heater
23DZP4: 6.3v/450 ma Heater

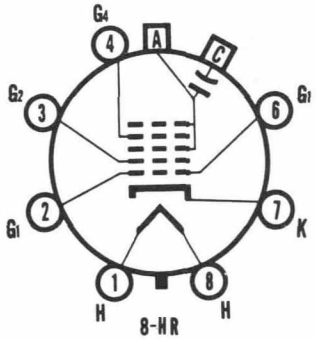


SYLVANIA
ELECTRONIC TUBES

A Division of
Sylvania Electric Products Inc.

PICTURE TUBE
OPERATIONS

SENECA FALLS, NEW YORK

*Prepared and Released By The*
*TECHNICAL PUBLICATIONS SECTION*
*EMPORIUM, PENNSYLVANIA*

SEPTEMBER, 1963



*File Under*
TELEVISION PICTURE TUBES

## MAXIMUM RATINGS (Design Maximum Values) (Cont'd)

| | | |
|---|---|---|
| **Cathode Drive Service**[4] | | |
| Maximum Anode Voltage | 22,000 Volts | dc |
| Minimum Anode Voltage | 11,000 Volts | dc |
| Grid No. 4 Voltage (Focusing Electrode) | −400 to +1250 Volts | dc |
| Maximum Grid No. 2 Voltage | 700 Volts | dc |
| Minimum Grid No. 2 Voltage | 350 Volts | dc |
| Cathode Voltage | | |
| Positive Bias Value | 155 Volts | dc |
| Positive Peak Value | 220 Volts | |
| Negative Bias Value | 0 Volt | dc |
| Negative Peak Value | 2 Volts | |
| Peak Heater-Cathode Voltage | | |
| Heater Negative with Respect to Cathode | | |
| During Warm-up Period Not to Exceed 15 Seconds | 450 Volts | |
| After Equipment Warm-up Period | 200 Volts | |
| Heater Positive with Respect to Cathode | 200 Volts | |

## TYPICAL OPERATING CONDITIONS

| | | |
|---|---|---|
| **Grid Drive Service**[3] | | |
| Anode Voltage | 18,000 Volts | dc |
| Grid No. 4 Voltage for Focus | 0 to 400 Volts | dc |
| Grid No. 2 Voltage | 400 Volts | dc |
| Grid No. 1 Voltage Required for Cutoff[5] | −46 to −94 Volts | dc |
| **Cathode Drive Service**[4] | | |
| Anode Voltage | 18,000 Volts | dc |
| Grid No. 4 Voltage for Focus | 0 to 400 Volts | dc |
| Grid No. 2 Voltage | 400 Volts | dc |
| Cathode Voltage Required for Cutoff[5] | 42 to 78 Volts | dc |

## CIRCUIT VALUES:

| | |
|---|---|
| Grid No. 1 Circuit Resistance | 1.5 Megohms Max. |

## NOTES:

1. *Heater warm-up time is defined as the time required for the voltage across the heater to reach 80 % of its rated value after applying four (4) times rated heater voltage to a circuit consisting of the tube heater in series with a resistance equal to three (3) times rated heater voltage divided by rated heater current.*
2. *External conductive coating and rim band must be grounded.*
3. *Voltages are positive with respect to Cathode unless indicated otherwise.*
4. *Voltages are positive with respect to Grid No. 1 unless indicated otherwise.*
5. *Visual extinction of focused raster. For cutoff of the undeflected spot, the absolute value of the bias between cathode and grid will increase by about 5 volts.*

## WARNING:

*X-ray radiation shielding may be necessary to protect against possible danger of personal injury from prolonged exposure at close range if this tube is operated at higher than the manufacturer's Maximum Rated Anode Voltage or 16,000 volts, whichever is less.*

## OUTLINE

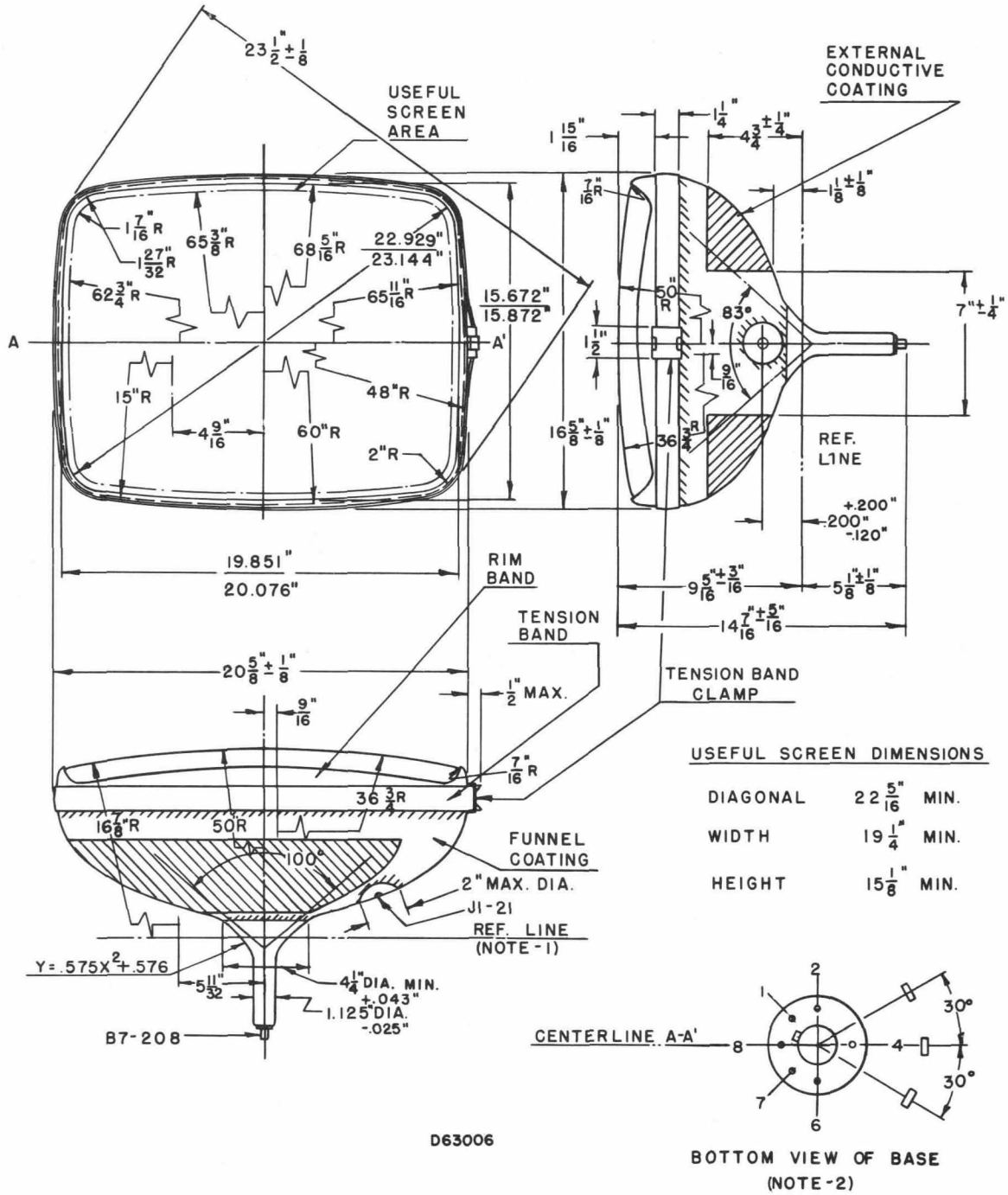


**USEFUL SCREEN DIMENSIONS**

| | | |
|---|---|---|
| DIAGONAL | $22\frac{5}{16}$" | MIN. |
| WIDTH | $19\frac{1}{4}$" | MIN. |
| HEIGHT | $15\frac{1}{8}$" | MIN. |

## DIAGRAM NOTES:

1. *Reference line is determined by plane C-C' of JEDEC No. 126 Reference Line Gauge, when the gauge is seated against the bulb.*
2. *Base Pin No. 4 aligns with horizontal centerline (A-A') within 30° and is on same side as anode contact, J1-21.*