CHARACTERISTICS

GENERAL DATA

Focusing Method	Tri-Potential Electrostatic
Deflection Method	Magnetic
Deflection Angles (Approx.)	
Horizontal	99 Degrees
Diagonal	110 Degrees
Vertical	82 Degrees
Phosphor	Aluminized P4
Fluorescence	White
Persistence	Short to Medium
Faceplate	Bonded Shield
(Gray Filter Glass Safety Plate Laminated Directly to Face of Tube)	
Light Transmittance of Faceplate Assembly (Approx.)	40 Percent

23BRP4: External surface of safety plate treated to reduce specular reflection.

ELECTRICAL DATA

Heater Voltage	6.3 Volts	
Heater Current	0.30 ± 5 % Ampere	
Heater Warm-up Time[1]	11 Seconds	
Direct Interelectrode Capacitances (Approx.)		
Cathode to All Other Electrodes	5 μμf	
Grid No. 1 to All Other Electrodes	6 μμf	
External Conductive Coating to Anode[2]	2500 μμf	Max.
	2000 μμf	Min.

MECHANICAL DATA

Minimum Useful Screen Dimensions (Maximum Assured)	
Height	15 ¼ Inches
Width	19 5/16 Inches
Diagonal	22 5/16 Inches
Area	282 Sq. Inches
Neck Length	3 9/16 ± ⅛ Inches
Overall Length	13 5/8 ± ⅜ Inches
Bulb	J187A
Safety Plate (23RP4)	FP198A
Safety Plate (23BRP4)	FP198B
Bulb Contact (Recessed Small Cavity Cap)	J1-21
Base	B7-208
Basing	8JR
Weight (Approx.)	32 ½ Pounds

RATINGS

MAXIMUM RATINGS (Design Maximum Values) Grid Drive Service

Anode Voltage	22,000 Volts	dc
Grid No. 3 Voltage (Focusing Electrode)	700 Volts	dc
Grid No. 2 Voltage	600 Volts	dc
Grid No. 1 Voltage		
Negative Bias Value	155 Volts	dc
Negative Peak Value	220 Volts	
Positive Bias Value	0 Volts	dc
Positive Peak Value	2 Volts	
Peak Heater-Cathode Voltage		
Heater Negative with Respect to Cathode		
During Warm-up Period not to Exceed 15 Seconds	450 Volts	
After Equipment Warm-up Period	200 Volts	
Heater Positive with Respect to Cathode	200 Volts	

QUICK REFERENCE DATA

Television Picture Tubes
23″ Direct Viewed
Rectangular Glass Type
Spherical Faceplate
Bonded Shield
Gray Filter Glass
Aluminized Screen
Tri-Potential Electrostatic Focus
110° Magnetic Deflection
No Ion Trap
External Conductive Coating
Short Neck
6.3 Volt, 300 Ma Heater
23BRP4: Anti-Reflection Treated

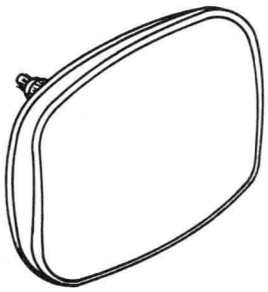

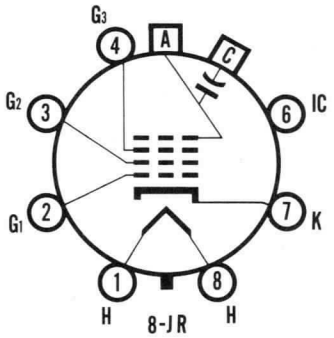

SYLVANIA
ELECTRONIC TUBES

A Division of
Sylvania Electric Products Inc.

PICTURE TUBE
OPERATIONS

SENECA FALLS, NEW YORK

Prepared and Released By The
TECHNICAL PUBLICATIONS SECTION
EMPORIUM, PENNSYLVANIA

JUNE, 1962

File Under
TELEVISION PICTURE TUBES

TYPICAL OPERATING CONDITIONS (Grid Drive Service)

Anode Voltage	16,000 Volts	dc
Grid No. 3 Voltage for Focus	0 to +400 Volts	dc
Grid No. 2 Voltage[3]	500 Volts	dc
Grid No. 1 Voltage Required for Cutoff[4]	−43 to −78 Volts	dc

CIRCUIT VALUES

Grid No. 1 Circuit Resistance	1.5 Megohms Max.

NOTES:

1. *Heater warm-up time is defined as the time required for the voltage across the heater to reach 80 % of the rated heater voltage after applying four (4) times rated heater voltage to a circuit consisting of the tube heater in series with a resistance equal to three (3) times the rated heater voltage divided by the rated heater current.*
2. *External conductive coating must be grounded.*
3. *Brightness and resolution improve with increase in Grid No. 2 Voltage. A minimum value of 400 volts is recommended.*
4. *Visual extinction of focused raster. Extinction of stationary focused spot will require that these values be about 5 volts more negative.*

WARNING:

X-ray radiation shielding may be necessary to protect against possible danger of personal injury from prolonged exposure at close range if this tube is operated at higher than the manufacturer's Maximum Rated Anode Voltage or 16,000 volts, whichever is less.

OUTLINE

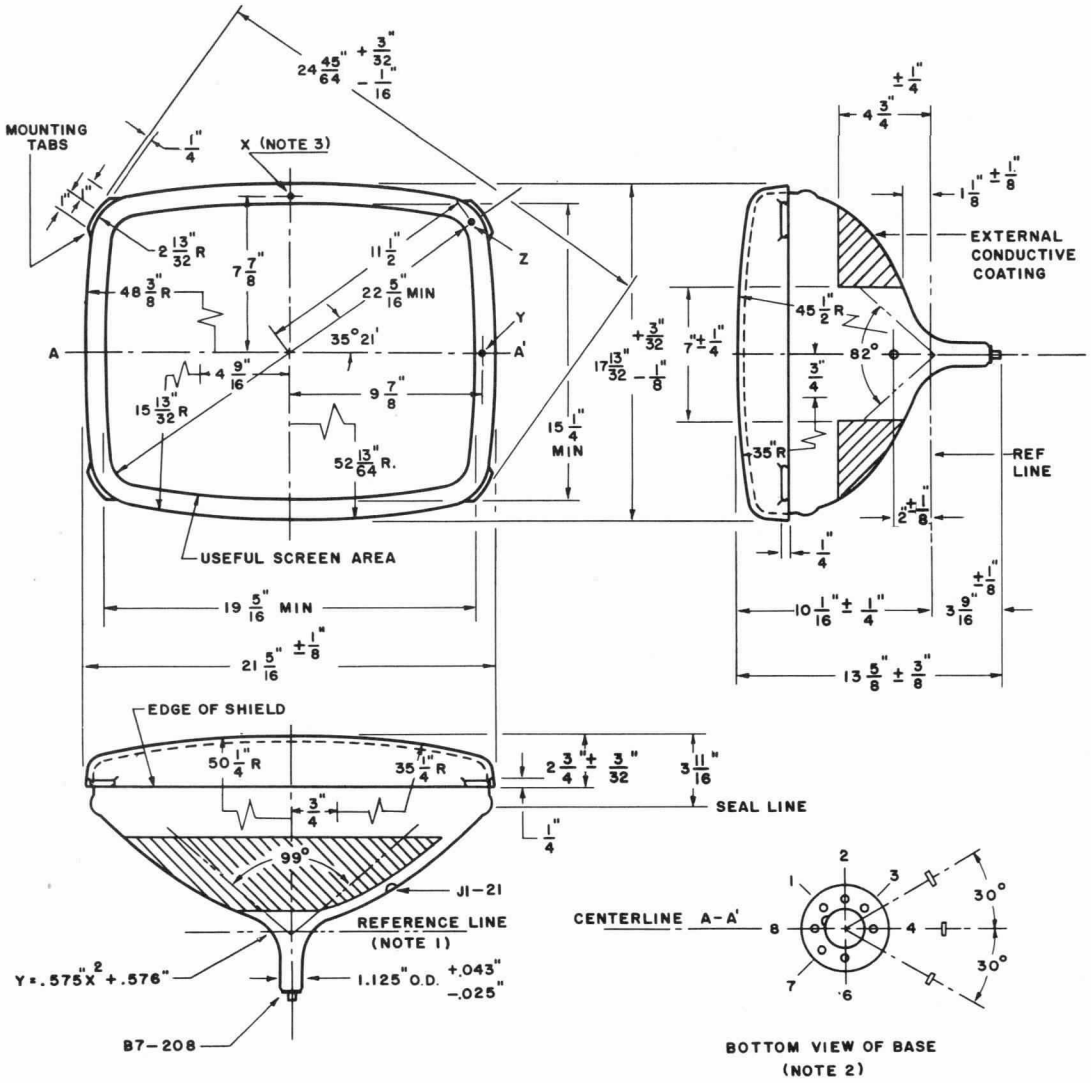

DIAGRAM NOTES:

1. *Reference line is determined by plane C-C' of JEDEC No. 126 Reference Line Gauge, when the gauge is seated against the bulb.*
2. *Base Pin No. 4 aligns with horizontal centerline (A-A') within 30° and is on same side as anode contact, J1-12.*
3. *Planes perpendicular to the tube axis and passing through points X, Y and Z are located as follows:*
   Plane Tangent to crown of face, to plane of X = 0.758″ Nom.
   Plane of X to plane of Y = 0.463″ ± .030″.
   Plane of X to plane of Z = 0.970″ ± .030″.