## CHARACTERISTICS

### GENERAL DATA

| | |
|---|---|
| Focusing Method | Electrostatic |
| Deflection Method | Magnetic |
| Deflection Angles (Approx.) | |
| Horizontal | 99 Degrees |
| Diagonal | 110 Degrees |
| Vertical | 82 Degrees |
| Phosphor | Aluminized P4 |
| Fluorescence | White |
| Persistence | Short to Medium |
| Faceplate | Bonded Shield |
| (Gray Filter Glass Safety Plate Laminated Directly to Face of Tube) | |
| Light Transmittance of Faceplate Assembly (Approx) | 40 Percent |
| 23BHP4: External Surface of Safety Plate Treated to Reduce Specular Reflection | |

### ELECTRICAL DATA

| | | |
|---|---|---|
| Heater Voltage | 6.3 Volts | |
| Heater Current | 0.60 ± 5% Ampere | |
| Heater Warm-up Time[1] | 11 Seconds | |
| Direct Interelectrode Capacitances (Approx.) | | |
| Cathode to All Other Electrodes | 5 μμf | |
| Grid No. 1 to All Other Electrodes | 6 μμf | |
| External Conductive Coating to Anode[2] | 2500 μμf | Max. |
| | 1700 μμf | Min. |

### MECHANICAL DATA

| | |
|---|---|
| Minimum Useful Screen Dimensions (Maximum Assured) | |
| Height | 15¼ Inches |
| Width | 19 5/16 Inches |
| Diagonal | 22 5/16 Inches |
| Area | 282 Sq. Inches |
| Neck Length | 5⅛ ± ⅛ Inches |
| Overall Length | 15 3/16 ± ⅜ Inches |
| Bulb | J187A or Equivalent |
| Safety Plate | |
| 23BGP4 | FP198A or Equivalent |
| 23BHP4 | FP198B or Equivalent |
| Bulb Contact (Recessed Small Cavity Cap) | J1-21 |
| Base | B7-208 |
| Basing | 8HR |
| Weight (Approx.) | 32½ Pounds |

## QUICK REFERENCE DATA

Television Picture Tube
23″ Direct Viewed
Rectangular Glass Type
Spherical Faceplate
Bonded Shield
Gray Filter Glass
Aluminized Screen
Neck Length 5⅛″
Electrostatic Focus
110° Magnetic Deflection
No Ion Trap
External Conductive Coating
23BHP4: Anti Reflection Treated

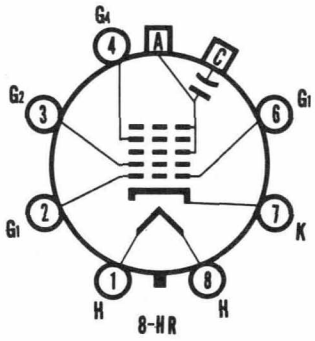


SYLVANIA
ELECTRONIC TUBES
A Division of
Sylvania Electric Products Inc.
PICTURE TUBE OPERATIONS
SENECA FALLS, NEW YORK
*Prepared and Released By The*
*TECHNICAL PUBLICATIONS SECTION*
*EMPORIUM, PENNSYLVANIA*
OCTOBER, 1961

*File Under*
TELEVISION PICTURE TUBES

# RATINGS

## MAXIMUM RATINGS (Design Maximum Values)

Cathode Drive Service[3]

| | | |
|---|---|---|
| Maximum Anode Voltage | 22,000 Volts | dc |
| Minimum Anode Voltage | 12,000 Volts | dc |
| Grid No. 4 Voltage (Focusing Electrode) | −550 to + 1100 Volts | dc |
| Grid No. 2 Voltage | 70 Volts | dc |
| Cathode Voltage | | |
| Positive Bias Value | 155 Volts | dc |
| Positive Peak Value | 220 Volts | |
| Negative Bias Value | 0 Volts | dc |
| Negative Peak Value | 2 Volts | |
| Peak Heater-Cathode Voltage | | |
| Heater Negative with Respect to Cathode During Warm-up Period not to Exceed 15 Seconds | 450 Volts | |
| After Equipment Warm-up Period | 200 Volts | |
| Heater Positive with Respect to Cathode | 200 Volts | |

## TYPICAL OPERATING CONDITIONS (Cathode Drive Service)[3]

| | | |
|---|---|---|
| Anode Voltage | 16,000 Volts | dc |
| Grid No. 4 Voltage for Focus | 0 to + 400 Volts | dc |
| Grid No. 2 Voltage[3] | 50 Volts | dc |
| Cathode Voltage Required for Cutoff[4] | +32 to +47 Volts | dc |

## CIRCUIT VALUES

| | |
|---|---|
| Grid No. 1 Circuit Resistance | 1.5 Megohms Max. |

## NOTES:

1. *Heater warm-up time is defined as the time required for the voltage across the heater to reach 80% of the rated heater voltage after applying four (4) times rated heater voltage to a circuit consisting of the tube heater in series with a resistance equal to three (3) times the rated heater voltage divided by the rated heater current.*
2. *External conductive coating must be grounded.*
3. *Voltages are positive with respect to Grid No. 1 unless indicated otherwise.*
4. *Visual extinction of focused raster. Extinction of stationary focused spot will require that these values be about 5 volts more positive.*

## WARNING:

*X-ray radiation shielding may be necessary to protect against possible danger of personal injury from prolonged exposure at close range if this tube is operated at higher than the manufacturer's Maximum Rated Anode Voltage or 16,000 volts, whichever is less.*

## OUTLINE

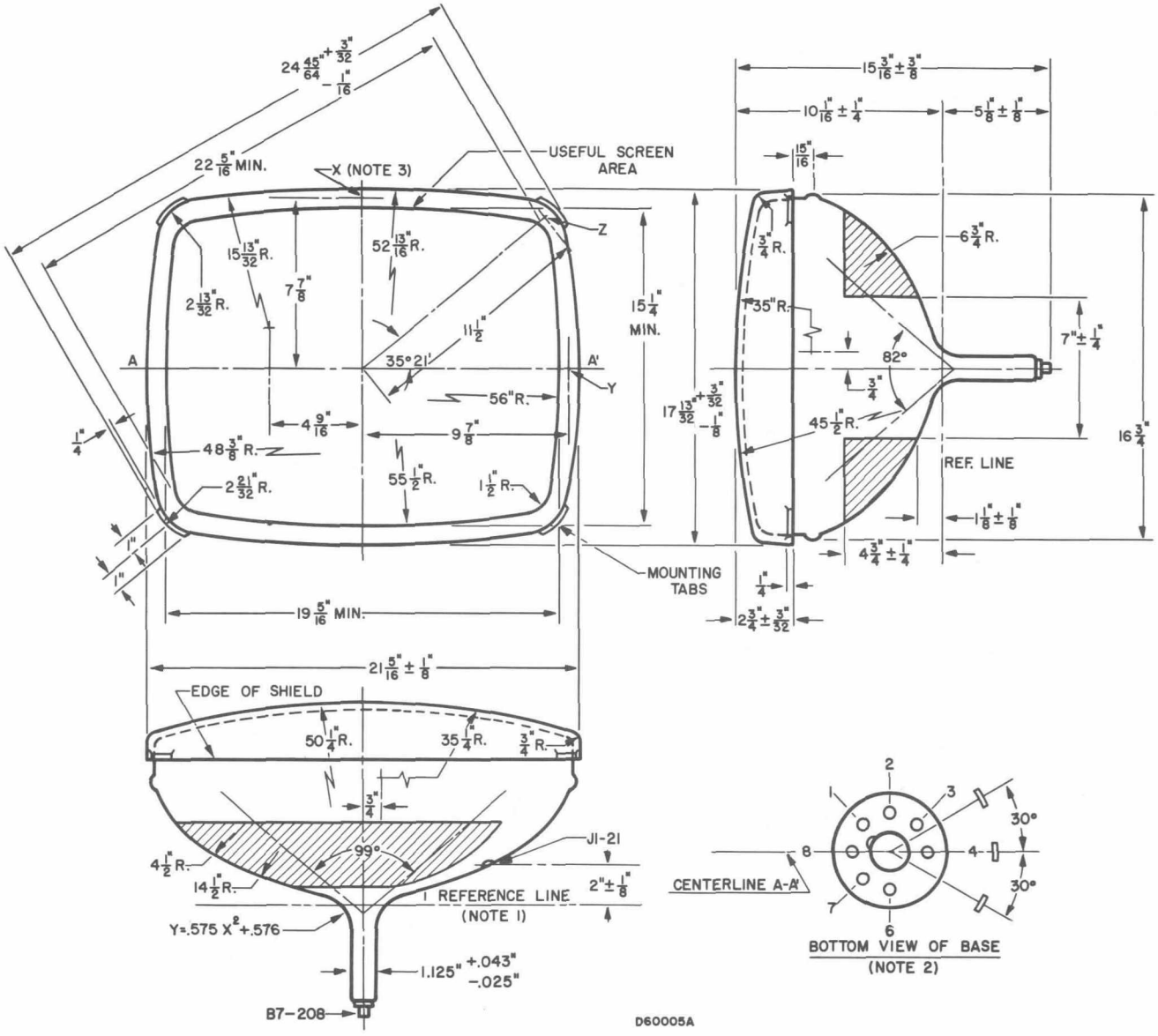


## DIAGRAM NOTES:

1. *Reference line is determined by Plane C-C' of JEDEC No. 126 Reference Line Gauge, when the gauge is seated against the bulb.*
2. *Base Pin No. 4 aligns with horizontal centerline (A-A') within 30° and is on same side as anode contact, J1-21.*
3. *Planes perpendicular to the axis and passing through Points X, Y and Z are located as follows:*

   *Plane tangent to crown of face, to plane of X = 0.785" Nom.*

   *Plane of X to plane of Y = 0.463" ± .030*

   *Plane of X to plane of Z = 0.970" ± .030*