R A U L A N D

TYPES 22CP7, 22CP14, 22CP19, 22CP25 CATHODE RAY TUBES

The type 22CP7, 22CP14, 22CP19 and 22CP25 tubes are 22" magnetic focus and magnetic deflection, round metal envelope cathode ray tubes, suitable for radar application.

They feature an almost completely flat face, which minimizes parallax error and they have a long persistence screen.

TENTATIVE CHARACTERISTICS

GENERAL

Electrical Data

Heater Voltage	6.3	Volts
Heater Current	0.6 ± 10%	Amperes
Heater Warm-up time (approx.)	11	Seconds
Focusing Method	Magnetic	
Deflecting Method	Magnetic	
Deflecting Angle (approx.)	70	Degrees

Phosphor	No. 7	No. 14	No. 19	No. 25
Fluorescence	Blue	Blue	Orange	Orange
Phosphorescence	Yellow	Orange	Orange	Orange
Persistence	Long	Med.Long	Long	Long

Face Plate - clear glass

Direct Interelectrode Capacitances, (approx.)

Cathode to all other electrodes	5	uuf
Grid No. 1 to all other electrodes	6	uuf

Mechanical Data

Overall Length	21-5/8 ± 7/16	Inches
Greatest diameter of envelope	21-3/4 ± 1/8	Inches
Minimum useful screen diameter	20-1/4	Inches
Radius (face plate) (approx.)	165	Inches
Anode contact	Metal cone lip	
Base (Small Shell Duodecal 5-pin)	B5-57	
Basing Connections	12D	

The Rauland Corporation
Chicago, Illinois

from JETEC release #1578, Feb. 6, 1956

R A U L A N D

TYPE 22CP7, 22CP14, 22CP19, 22CP25 CATHODE RAY TUBES

Maximum Ratings - Design Center Values

Accelerator Voltage[1]	16,000	Max. volts DC
Grid #2 Voltage	+1,000	Max. volts DC
Grid #1 voltage (control electrode)		
Negative bias value	-125	Max. volts DC
Positive bias value	0	Max. volts DC
Positive peak value	+ 2	Max. volts
Peak Heater - Cathode voltage[2]		
Heater Negative with Respect to Cathode	180	Max. volts DC
Heater Positive with Respect to Cathode	180	Max. volts DC
Heater Negative with Respect to Cathode during warm-up period, not to exceed 15 seconds	410	Max. volts DC

Typical Operating Conditions

Accelerator Voltage[3]	12,000	Volts	DC
Grid #2 Voltage	+300	Volts	DC
Grid #1 Voltage[4]	-33 to -77	Volts	
Spot Position (Undeflected)[5]	20	MM	
Field Strength of Adjustable Centering Magnet	0 to 8	Gauss	
Focusing Coil Current (Approx)[6]	95 ± 20%	MA.	

Maximum Circuit Values

Grid #1 Circuit Resistance	1.5	Max. Megohms

NOTES

1. At or near this rating, the effective resistance of the accelerator supply should be adequate to limit the accelerator input power to 6 watts. The screen of the 22CP- can be permanently damaged should the current density be permitted to rise too high. To prevent burning, minimum beam current densities should be employed.

2. Cathode should be returned to one side or to the mid-tap of the heater transformer windings.

3. Brilliance and definition decrease with decreasing accelerator voltage. In general, accelerator voltage should not be less than 8000 Volts.

4. Visual extinction of undeflected focused spot.

5. The center of the undeflected focused spot will fall within a circle of 20 MM radius concentric with the center of the tube face.

6. For standard focusing coil RTMA No. 106 or equivalent, with the combined grid No. 1 bias voltage and video-signal voltage adjusted to produce a highlight brightness of 10 foot-lamberts on a 7 3/4" x 10 1/2" area. The coil air gap center line to reference line (distance D) shall be 3-1/4 inches.

22CP7 22CP19

22CP14 22CP25

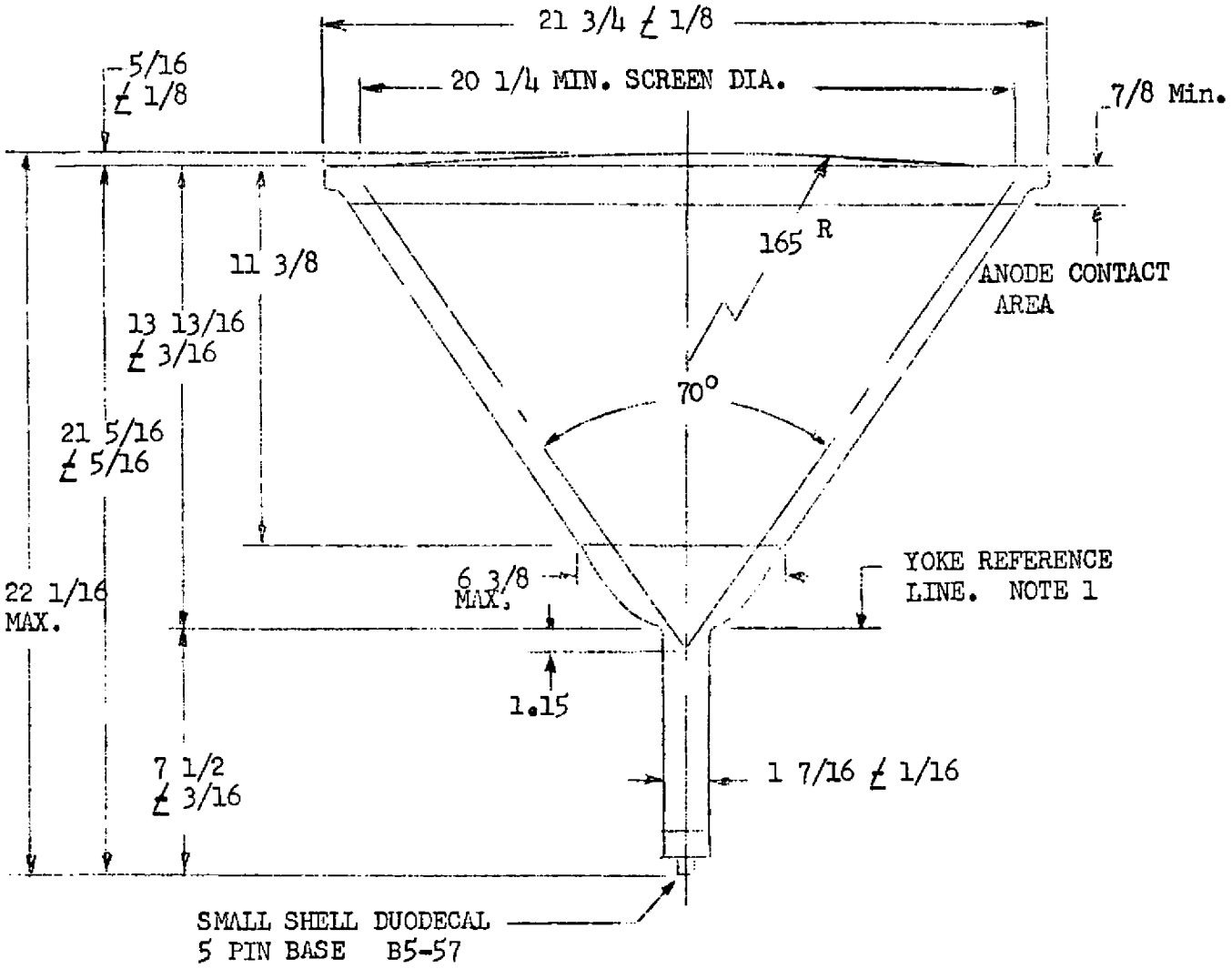

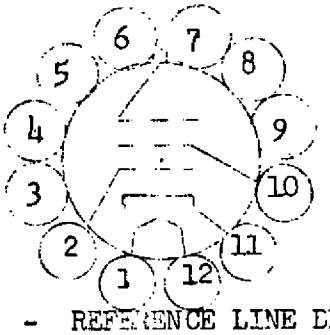

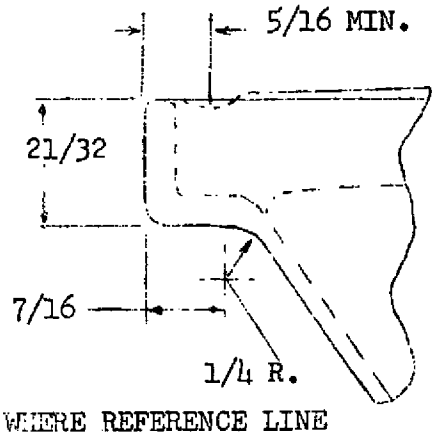

NOTE 1 - REFERENCE LINE DETERMINED BY POSITION WHERE REFERENCE LINE GAUGE #110 WILL REST ON GLASS FUNNEL.

THE RAULAND CORPORATION CHICAGO 41, ILLINOIS