EIMAC
Division of Varian
SAN CARLOS
CALIFORNIA

2-2000A

HIGH-VACUUM RECTIFIER

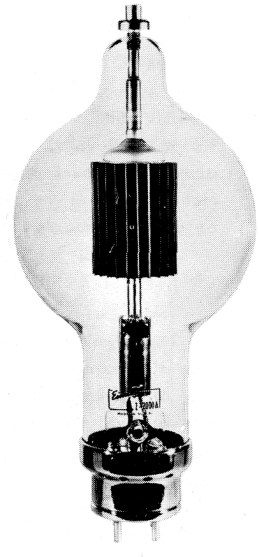

The Eimac 2-2000A is a high-vacuum diode rectifier intended for use in rectifier units, voltage multipliers, or in special applications, whenever conditions of extreme ambient temperatures, high operating frequency, high peak inverse voltages, or the production of high-frequency transients would prevent the use of gas-filled rectifier tubes.

The 2-2000A has a maximum d-c current rating of 750 milliamperes and a maximum peak inverse voltage rating of 75,000 volts. Cooling is by forced air, convection, and radiation.

A single 2-2000A will deliver 600 milliamperes at 31,500 volts to a capacitor-input filter with 26,500 volts single-phase supply. Four 2-2000A's in a bridge circuit will deliver 1.50 amperes at 47,600 volts to a choke-input filter with 53,000 volts single-phase supply.

GENERAL CHARACTERISTICS

ELECTRICAL

Filament: Thoriated Tungsten	
Voltage	10.0 volts
Current	25.0 amperes

MECHANICAL

Base	Special 4-pin
Basing	Refer to outline drawing
Socket	Refer to discussion under "Application"
Mounting Position	Vertical, base down or up
Cooling	Forced air, convection, and radiation
Maximum Temperature of Plate Seal	225°C
Recommended Heat Dissipating Plate Connector	Eimac HR-8
Maximum Over-all Dimensions:	
Length	17.8 inches
Diameter	8.13 inches
Net Weight	3 pounds
Shipping Weight (approx.)	13 pounds

MAXIMUM RATINGS (Per tube)

PEAK INVERSE PLATE VOLTAGE	75,000 MAX. VOLTS
PLATE DISSIPATION	1200 MAX. WATTS
D-C PLATE CURRENT[1]	750 MAX. MA
PEAK PLATE CURRENT	12 MAX. AMPERES

[1]Averaged over one cycle for each tube. Applies only when the rectifier is coupled to the load by a choke-input filter incorporating the "critical" value (or larger) of input inductance. For maximum d-c current ratings under this and other load conditions see discussion under "Application".

APPLICATION

MECHANICAL

Mounting—The 2-2000A must be mounted vertically with the base either down or up. The lead to the plate terminal of the tube should be flexible.

The special 4-pin base fits an E. F. Johnson Co. No. 124-214 or an equivalent socket. In some circuits, particularly those of the voltage multipliers illustrated in Fig. 2, it may be necessary to mount the socket on stand-off insulators, or on a sheet of insulating material, to provide adequate insulation to ground.

Cooling—The 2-2000A is cooled by forced air, convection, and radiation. Forced air is required for cooling of the filament seals. If an E. F. Johnson Co. No. 124-214 socket is used, air at a static pressure of 4 inches of water measured at the inlet of the ¼-inch cooling tube in the socket will provide sufficient base cooling. The base of the tube is provided with a 1-inch diameter hole. If a socket is used with a 1-inch diameter matching hole and the manifold is of the same diameter, a static pressure of less than 0.1 inch of water will be required. Clearance should be provided around the glass envelope adequate

(Effective 7-1-52) Copyright 1952

APPLICATION (Continued)

for the free circulation of air. An Eimac HR-8 heat Dissipating Connector or equivalent is required on the plate terminal.

The maximum temperature at the plate seal must not exceed 225°C. A convenient accessory for measuring this temperature is "Tempilaq", a temperature-sensitive lacquer available from the Tempil Corporation, 132 W. 22nd St, New York 11, N. Y.

ELECTRICAL

Filament Operation—For maximum tube life, the filament voltage, as measured at the base pins, should be the rated value of 10.0 volts. Variations must be kept within the range from 9.5 to 10.5 volts. In applications which require the diode to deliver high peak currents, it is important to maintain the filament voltage at the rated value. All four socket terminals should be used, putting two in parallel for each filament connection.

CAUTION SHOULD BE OBSERVED WHEN MEASURING RECTIFIER FILAMENT VOLTAGE. THE FILAMENT CIRCUIT MAY BE AT HIGH POTENTIAL.

The thoriated-tungsten filament of the 2-2000A reaches operating temperature in a fraction of a second after application of voltage. Plate voltage may be applied simultaneously with filament voltage.

Plate Operation—The plate of the 2-2000A operates at dull red color at the maximum plate dissipation rating of 1200 watts. The maximum peak-inverse-voltage rating of 75,000 volts should not be exceeded at any time.

Performance—The accompanying table shows some maximum performance capabilities of the 2-2000A when used as a power-supply rectifier.

2-2000A MAXIMUM-PERFORMANCE CAPABILITIES

		Capacitor-Input Filter		Choke-Input Filter	
Circuit Type	A-C Input Voltage (volts rms)	D-C Output Voltage (volts)	D-C Output Current (amperes)	D-C Output Voltage (volts)	D-C Output Current (amperes)
Single-Phase, Half-Wave	26,500	31,500	0.600	.....	.....
Single-Phase, Full-Wave	26,500[1]	31,500	1.20	23,800	1.50
Single-Phase, Bridge	53,000	63,000	1.20	47,600	1.50

[1]One-half the transformer secondary voltage.

Maximum D-C Current Ratings—Plate dissipation rather than peak current usually limits the d-c current which the 2-2000A is capable of delivering to the load. Because the plate dissipation associated with a given d-c current depends upon the amount of ripple and its wave-shape, circuit conditions will determine the maximum d-c current rating of the tube.

Choke-Input Filter—The maximum d-c current rating of the 2-2000A is 750 milliamperes when the load incorporates a choke-input filter with the "critical" value (or larger) of input inductance (L_1 in Fig. 1):

$$L_o = \frac{R_{eff}}{18.8f} \quad \text{for full-wave single-phase rectifiers,}$$

$$L_o = \frac{R_{eff}}{75f} \quad \text{for half-wave three-phase rectifiers,}$$

$$L_o = \frac{R_{eff}}{660f} \quad \text{for full-wave three-phase rectifiers,}$$

where: L_o = "critical" value of input inductance (henries),
f = supply-line frequency (cycles per second),

$$R_{eff} = \frac{\text{Load voltage (volts)}}{\text{Load current (amps)}}.$$

Choke-input filters are not normally used with single-phase half-wave rectifiers.

Capacitor-Input Filter—The 2-2000A is particularly suitable for power-supply applications demanding high voltage at low current. Under these conditions capacitor-input filter circuits become desirable. The maximum d-c current rating of the 2-2000A when no input choke is incorporated in the filter depends upon the total series resistance of the capacitor-charging circuit relative to the effective load resistance seen by each tube. The circuit diagrams and tabulation in Fig. 2 are so arranged and labeled that this required series resistance may be found for a wide range of load conditions. This may be done by determining the value of the following quantities:

E_c is the filter-input d-c voltage. While this is usually the entire load voltage, in the case of voltage multipliers it is the load voltage divided by the multiplication factor.

I_p is the d-c current per tube. This is the entire load current only in the case of the simple half-wave rectifier or half- or full-wave multiplier. In the case of full-wave center-tapped or bridge rectifiers, I_p is half the load current.

R_c is the total charging-circuit resistance. A certain minimum value of charging-circuit resistance is necessary to limit the peak value of current to which the tubes will be subjected under given load conditions. This required minimum depends upon the d-c current per tube (I_p), and has been tabulated in Fig. 2 as a percentage of the effective load resistance per tube (E_c/I_p). The total charging-circuit resistance involves the internal resistance of the rectifier tube, R_p, the added series resistor, R_s, and the equivalent internal resistance of the a-c voltage supply, R_i.

R_p is the plate resistance of the 2-2000A, which may be taken as 400 ohms.

R_i is the equivalent internal resistance of the supply. This may be taken as the regulation of the high-voltage supply expressed as a decimal multiplied by the load resistance used in measuring this regulation.

R_s is the series resistor which must be inserted in the charging circuit to bring the total charging-circuit resistance up to the required minimum. Its value may be found from the formula associated with each of the circuits of Fig. 2. This resistor must be inserted in such a position in the circuit that it protects all tubes.

Tubes may be operated in parallel to increase the output capability in a given circuit. When two tubes are placed in parallel at each place where one is shown in the circuits of Fig. 2, the plate resistance (R_p) will be half as great and the maximum allowable load current twice as great as indicated.

Peak Inverse Voltage—The peak-inverse-voltage rating of the 2-2000A is 75,000 volts. In single-phase power-supply rectifier circuits the peak inverse voltage to be used in design is the peak a-c supply voltage (1.41 times E_{rms} in Fig. 2) in the case of bridge circuits, and twice this value in the case of half- and full-wave rectifiers and voltage multipliers. Peak inverse voltage in three-phase operation depends upon the circuit employed, and will be found listed in the handbooks.

Special Applications—The ratings given for capacitor-input filter circuits assume values of input capacitance large enough to hold the ripple to a low value. In special applications where a larger percent ripple is tolerable, and filter capacitance is low, the 2-2000A is capable of larger d-c output currents.

As a unidirectional conductor in d-c circuits where the current is continuous and the percent ripple is moderate, the maximum current rating of the 2-2000A is 1500 milliamperes.

The plate characteristic curve for the 2-2000A serves as a guide to special applications. The maximum plate dissipation rating of 1200 watts, the maximum peak-inverse-voltage rating of 75,000 volts, and the maximum peak plate current of 12 amperes must not be exceeded.

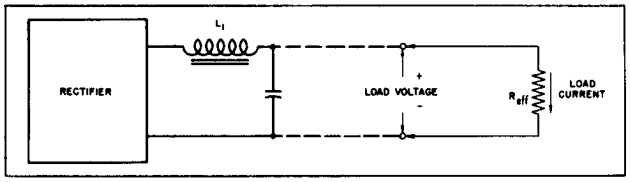

Fig. 1. Rectifier with Choke-Input Filter

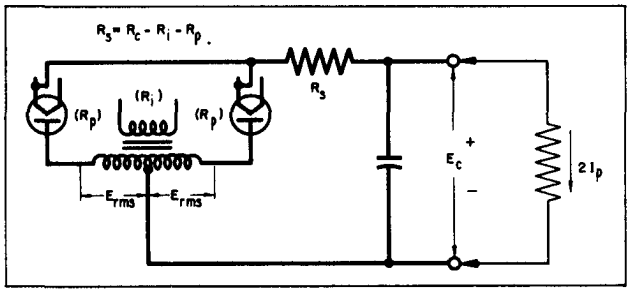

a. Full-Wave Center-Tapped Rectifier

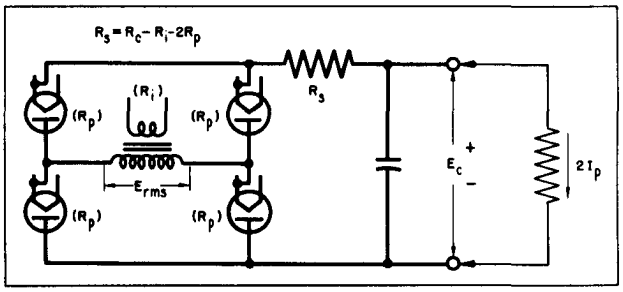

b. Full-Wave Bridge Rectifier

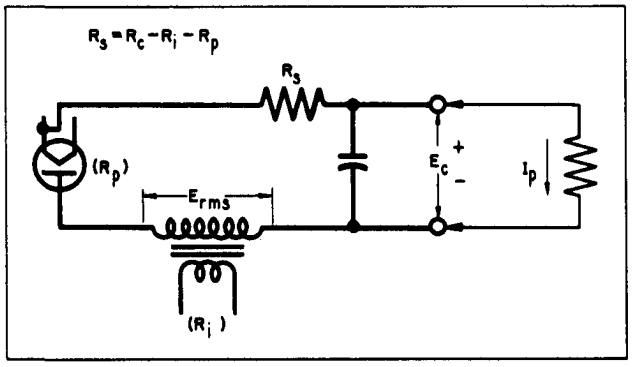

c. Half-Wave Rectifier

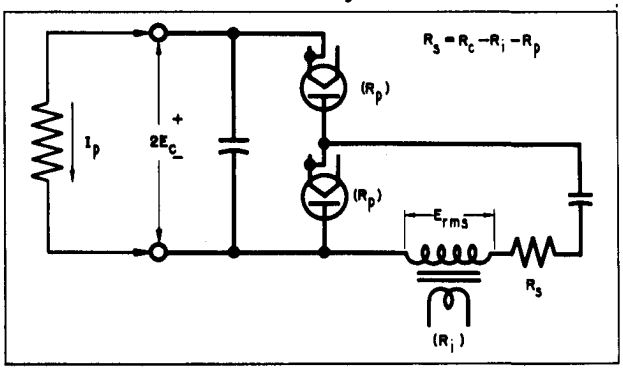

d. Half-Wave Voltage Doubler

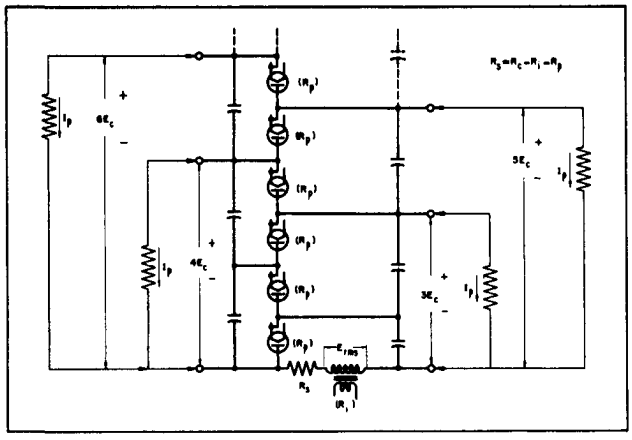

e. Half-Wave Voltage Multiplier (with common ground when R_s is inserted on the "high" side of E_{rms})

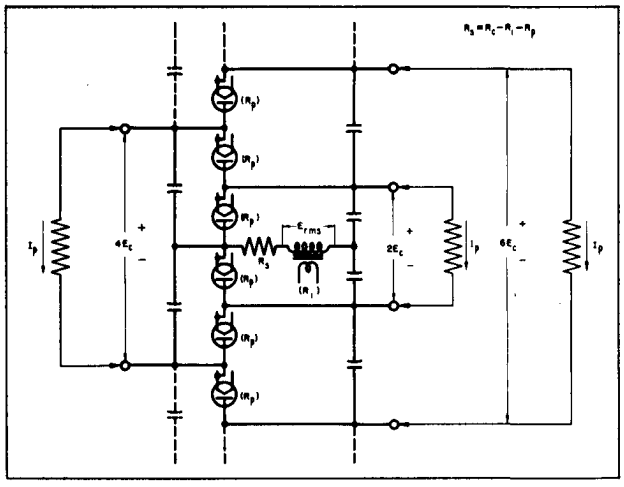

f. Full-Wave Voltage Multiplier

Eimac 2-2000A Maximum D-C Current Ratings for R-C Filter Applications						
D-C Plate Current (I_p)	550	600	650	700	750	milliamperes per tube
Total Charging-Circuit Resistance (R_c)	1.1	2.1	3.8	7.0	13	percent of Effective Load Resistance per Tube (E_c/I_p)
A-C Supply Voltage (E_{rms})	0.80	0.84	0.90	1.00	1.16	times Filter-Input D-C Voltage (E_c)
Peak Inverse Voltage (½ these values for circuit b.)	2.3	2.4	2.6	2.8	3.3	times Filter-Input D-C Voltage (E_c)

Fig. 2 Eimac 2-2000A basic R-C Circuits (for any one of the indicated loads)
R_i = Equivalent resistance of voltage source
R_p = 400 ohms (200 ohms for two tubes in parallel)

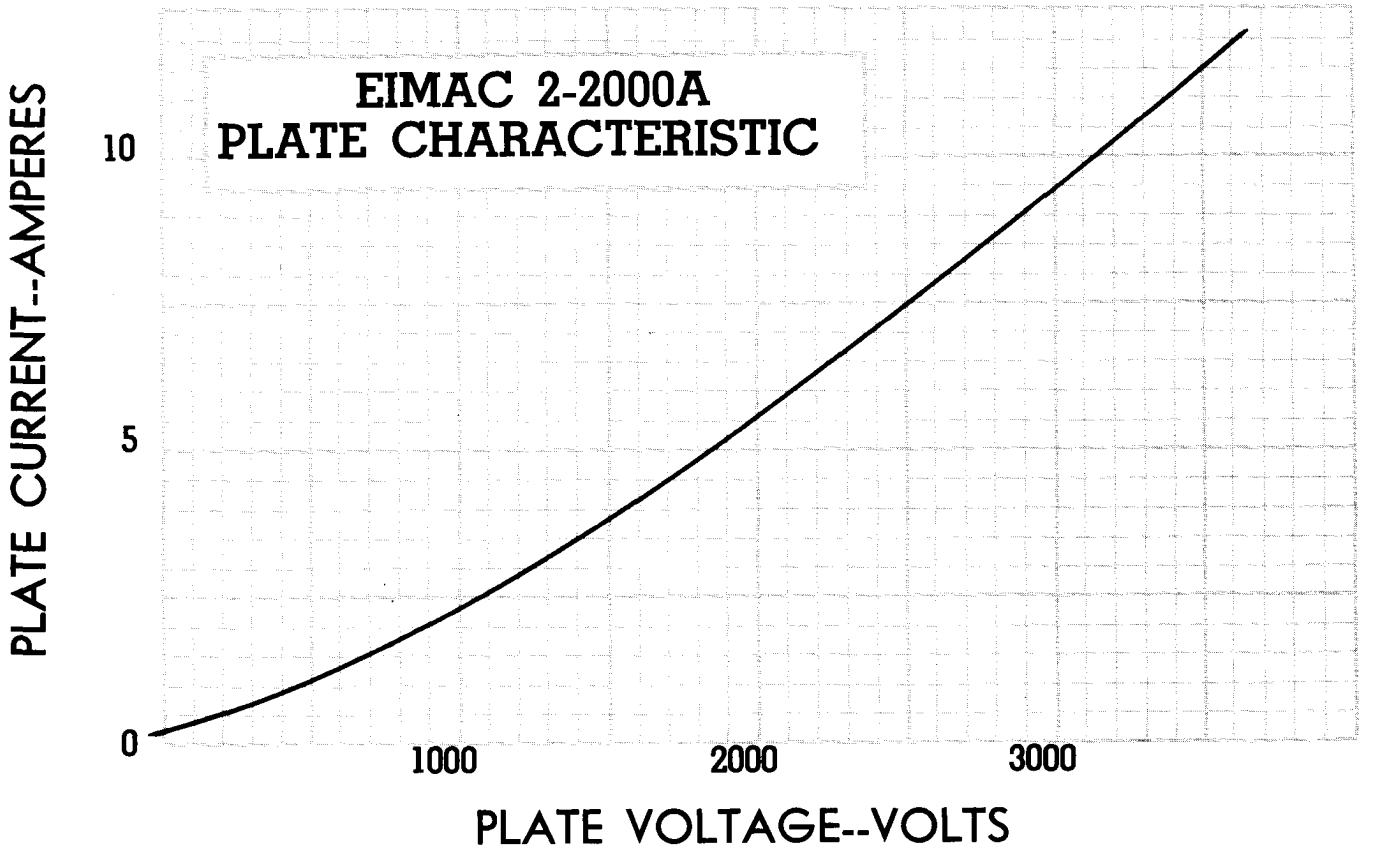
EIMAC 2-2000A
PLATE CHARACTERISTIC
PLATE CURRENT--AMPERES
10
5
0
1000
2000
3000
PLATE VOLTAGE--VOLTS

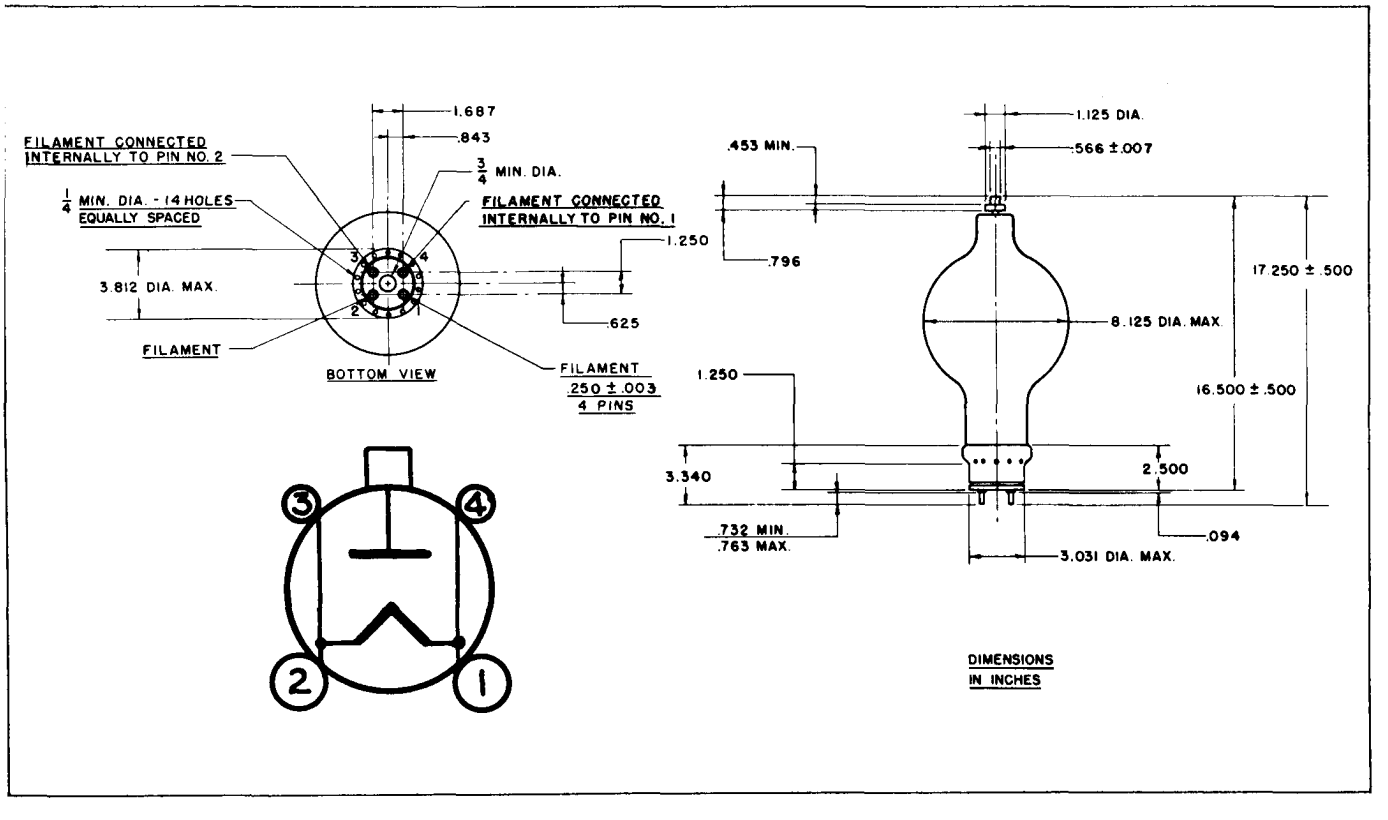
1.687
.843
FILAMENT CONNECTED INTERNALLY TO PIN NO. 2
3/4 MIN. DIA.
1/4 MIN. DIA. - 14 HOLES EQUALLY SPACED
FILAMENT CONNECTED INTERNALLY TO PIN NO. 1
1.250
3.812 DIA. MAX.
.625
FILAMENT
BOTTOM VIEW
FILAMENT .250 ± .003 4 PINS
1.125 DIA.
.453 MIN.
.566 ± .007
.796
17.250 ± .500
8.125 DIA. MAX.
1.250
16.500 ± .500
3.340
2.500
.732 MIN.
.763 MAX.
.094
3.031 DIA. MAX.
DIMENSIONS IN INCHES