TUNG-SOL

CATHODE RAY

THE 21YP4 AND 21YP4A ARE DIRECT-VIEW PICTURE TUBES DESIGNED FOR USE IN TELEVISION APPLICATIONS. THEY ARE IDENTICAL *EXCEPT* FOR THE ALUMINIZED SCREEN USED ON THE 21YP4A. THEIR COMMON FEATURES INCLUDE:

MAGNETIC DEFLECTION	**UNIPOTENTIAL CATHODE**
SPHERICAL FACEPLATE	**GREY FILTER FACEPLATE**
EXTERNAL CONDUCTIVE COATING	**EXTERNAL SINGLE FIELD ION TRAP**
RECTANGULAR GLASS CONSTRUCTION	**LOW VOLTAGE ELECTROSTATIC FOCUS**

19 1/8" X 14 3/16" RASTER SIZE

ELECTRICAL DATA

FOCUSING METHOD		ELECTROSTATIC
DEFLECTING METHOD		MAGNETIC
DEFLECTION ANGLE (APPROX.):		
HORIZONTAL	65	DEGREES
VERTICAL	50	DEGREES
DIAGONAL	70	DEGREES
DIRECT INTERELECTRODE CAPACITANCES (APPROX.):		
CATHODE TO ALL OTHER ELECTRODES	5	μμf
GRID #1 TO ALL OTHER ELECTRODES	6	μμf
MAXIMUM EXTERNAL CONDUCTIVE COATING TO ANODE	750	μμf
MINIMUM EXTERNAL CONDUCTIVE COATING TO ANODE	500	μμf

OPTICAL DATA

PHOSPHOR NUMBER	SULFIDE TYPE	NO. 4
FLUORESCENT COLOR		WHITE
PHOSPHORESCENT COLOR		WHITE
PERSISTENCE		SHORT
FACEPLATE LIGHT TRANSMISSION AT CENTER (APPROX.)	75	PERCENT

MECHANICAL DATA

OVERALL LENGTH	23 3/8	INCHES
GREATEST DIMENSIONS OF BULB:		
DIAGONAL	21 3/8	INCHES
WIDTH	20 1/4 ± 3/16	INCHES
HEIGHT	15 9/16 ± 3/16	INCHES
MINIMUM USEFUL SCREEN DIMENSIONS:		
WIDTH	19 1/8	INCHES
HEIGHT	14 3/16	INCHES
BULB CONTACT	RECESSED SMALL CAVITY CAP	J1-21
BASE	SMALL SHELL DUODECAL 6 PIN	B6-63
BASING		12L

BULB CONTACT ALIGNMENT

J1-21 CONTACT ALIGNS WITH PIN POSITION #6 ± 30 DEGREES

PIN CONNECTIONS

PIN 1 – HEATER
PIN 2 – GRID NO. 1
PIN 6 – GRID NO. 4
PIN 10 – GRID NO. 2
PIN 11 – CATHODE

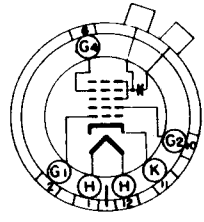

BOTTOM VIEW

PIN 12 – HEATER
ANODE CAP:
GRID NO. 3
GRID NO. 5

CONTINUED ON FOLLOWING PAGE

PRINTED IN U.S.A.

CONTINUED FROM PRECEDING PAGE

RATINGS

DESIGN CENTER VALUES

HEATER VOLTAGE	6.3	VOLTS
HEATER CURRENT	0.6	AMP.
MAXIMUM DC ANODE, GRID #3, GRID #5 VOLTAGE[A]	18 000	VOLTS
MAXIMUM DC GRID #4 VOLTAGE[B]	-500 TO +1000	VOLTS
MAXIMUM DC GRID #2 VOLTAGE	500	VOLTS
MAXIMUM GRID #1 VOLTAGE:		
DC NEGATIVE-BIAS VALUE	125	VOLTS
DC POSITIVE-BIAS VALUE	0	VOLTS
POSITIVE-PEAK VALUE	2	VOLTS
MAXIMUM DC PEAK HEATER-CATHODE VOLTAGE:		
HEATER NEGATIVE WITH RESPECT TO CATHODE		
DURING WARM-UP PERIOD NOT TO EXCEED 15 SECONDS	410	VOLTS
AFTER EQUIPMENT WARM-UP PERIOD	180	VOLTS
HEATER POSITIVE WITH RESPECT TO CATHODE	180	VOLTS

[A] BRILLIANCE AND DEFINITION DECREASE WITH DECREASING ANODE VOLTAGE. IN GENERAL, ANODE VOLTAGE SHOULD NOT BE LESS THAN 14,000 VOLTS.

[B] THIS VALUE APPLIES WHERE AN AC VOLTAGE IS PROVIDED FOR DYNAMIC FOCUSING.

TYPICAL OPERATING CONDITIONS AND CHARACTERISTICS

DC ANODE, GRID #3, GRID #5 VOLTAGE[C]	16 000	VOLTS
DC GRID #4 VOLTAGE[D]	-64 TO +350	VOLTS
DC GRID #2 VOLTAGE	300	VOLTS
DC GRID #1 VOLTAGE[E]	-33 TO -77	VOLTS
ION TRAP MAGNET (RATED STRENGTH)	45	GAUSSES

[C] BECAUSE THE RATING OF THIS TUBE PERMITS ANODE VOLTAGES AS HIGH AS 19.8 KV, SHIELDING OF X-RAY RADIATION FROM THE TUBE MAY BE NECESSARY. THIS PRECAUTION SHOULD BE OBSERVED WHEN THE ANODE IS OPERATED IN EXCESS OF 16 KV.

[D] WITH ANODE CURRENT OF 100 UAMP.

[E] VISUAL EXTINCTION OF UNDEFLECTED FOCUSED SPOT.

CIRCUIT VALUES

MAXIMUM GRID #1 CIRCUIT RESISTANCE	1.5	MEGOHMS

TUNG-SOL

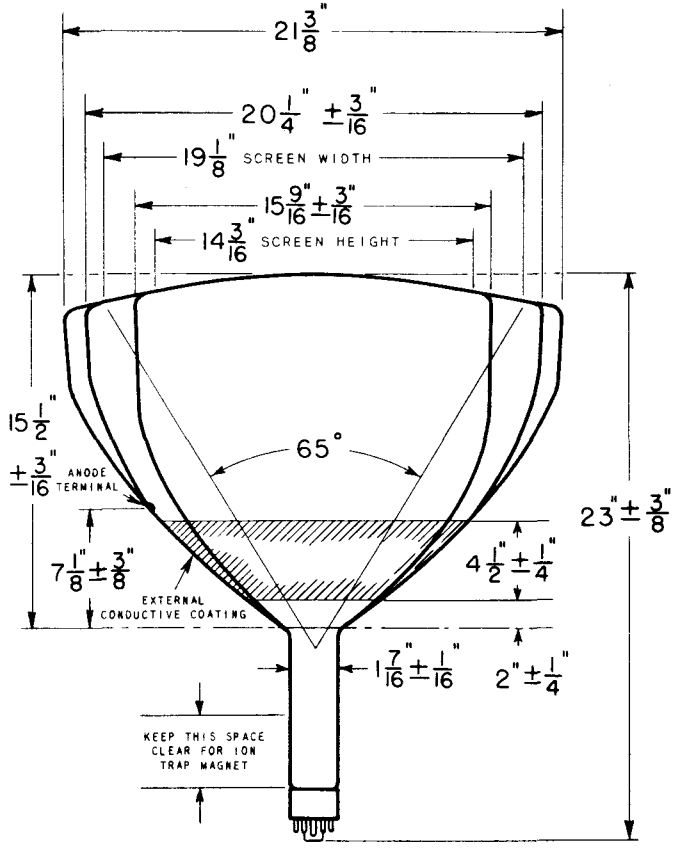

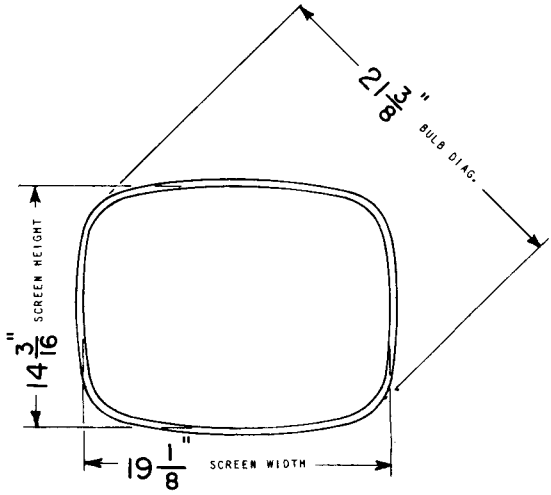

PRINTED IN U.S.A.