ADVANCE DATA

CHARACTERISTICS

GENERAL DATA

Focusing Method	Tri-Potential Electrostatic	
Deflection Method	Magnetic	
Deflection Angles (Approx.)		
Horizontal	105	Degrees
Diagonal	110	Degrees
Vertical	87	Degrees
Phosphor	Aluminized P4	
Fluorescence	White	
Persistence	Short to Medium	
Faceplate	Gray Filter Glass	
Light Transmittance (Approx.)	75	Percent

ELECTRICAL DATA

Heater Voltage	6.3	Volts
Heater Current	0.30 ± 5%	Ampere
Heater Warm-up Time[1]	11	Seconds
Direct Interelectrode Capacitances (Approx.)		
Cathode to All Other Electrodes	5	μμf
Grid No. 1 to All Other Electrodes	6	μμf
External Conductive Coating to Anode[2]	2500	μμf Max.
	2000	μμf Min.

MECHANICAL DATA

Minimum Useful Screen Dimensions (Maximum Assured)		
Height	15 1/16	Inches
Width	19 1/16	Inches
Diagonal	20 1/4	Inches
Area	262	Sq. Inches
Neck Length	3 9/16 ± 1/8	Inches
Overall Length	12 9/16 ± 5/16	Inches
Bulb	J171H or J171J	
Bulb Contact (Recessed Small Cavity Cap)	J1-21	
Base	B7-208	
Basing	8JR	
Weight (Approx.)	21	Pounds

QUICK REFERENCE DATA

Television Picture Tube
21" Direct Viewed
Rectangular Glass Type
Spherical Faceplate
Gray Filter Glass
Aluminized Screen
Tri-Potential
Electrostatic Focus
110° Magnetic Deflection
No Ion Trap
External Conductive
Coating
Short Neck
6.3 Volt, 300 Ma Heater

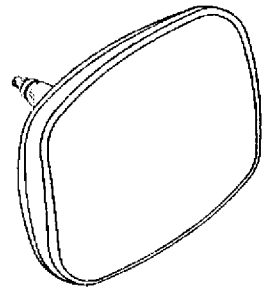

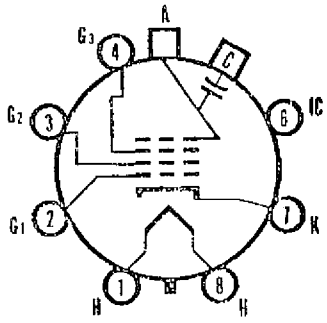

8JR

SYLVANIA
ELECTRONIC TUBES

A Division of
Sylvania Electric Products Inc.

PICTURE TUBE OPERATIONS
SENECA FALLS, NEW YORK

Prepared and Released By The
TECHNICAL PUBLICATIONS SECTION
EMPORIUM, PENNSYLVANIA
March 23, 1959

FORM 146 (10-58)

from JEDEC release #2448, April 27, 1959

RATINGS

MAXIMUM RATINGS (Design Maximum Values) Grid Drive Service

Anode Voltage	20,000	Volts	dc
Grid No. 3 Voltage (Focusing Electrode)	700	Volts	dc
Grid No. 2 Voltage	600	Volts	dc
Grid No. 1 Voltage			
Negative Bias Value	154	Volts	dc
Negative Peak Value	220	Volts	
Positive Bias Value	0	Volts	dc
Positive Peak Value	2	Volts	
Peak Heater-Cathode Voltage			
Heater Negative with Respect to Cathode			
During Warm-up Period not to Exceed 15 Seconds	450	Volts	
After Equipment Warm-up Period	200	Volts	
Heater Positive with Respect to Cathode	200	Volts	

TYPICAL OPERATING CONDITIONS (Grid Drive Service)

Anode Voltage	16,000	Volts	dc
Grid No. 3 Voltage for Focus	0 to +400	Volts	dc
Grid No. 2 Voltage[3]	500	Volts	dc
Grid No. 1 Voltage Required for Cutoff[4]	-43 to -78	Volts	dc

CIRCUIT VALUES

Grid No. 1 Circuit Resistance	1.5	Megohms	Max.

NOTES:

1. Heater warm-up time is defined as the time required for the voltage across the heater to reach 80% of the rated heater voltage after applying four (4) times rated heater voltage to a circuit consisting of the tube heater in series with a resistance equal to three (3) times the rated heater voltage divided by the rated heater current.

2. External conductive coating must be grounded.

3. Brightness and resolution improve with increase in Grid No. 2 voltage. A minimum value of 400 volts is recommended.

4. Visual extinction of focused raster. Extinction of stationary focused spot will require that these values be about 5 volts more negative.

WARNING:

X-ray radiation shielding may be necessary to protect against possible danger of personal injury from prolonged exposure at close range if this tube is operated at higher than the manufacturer's Maximum Rated Anode Voltage or 16,000 volts, whichever is less.

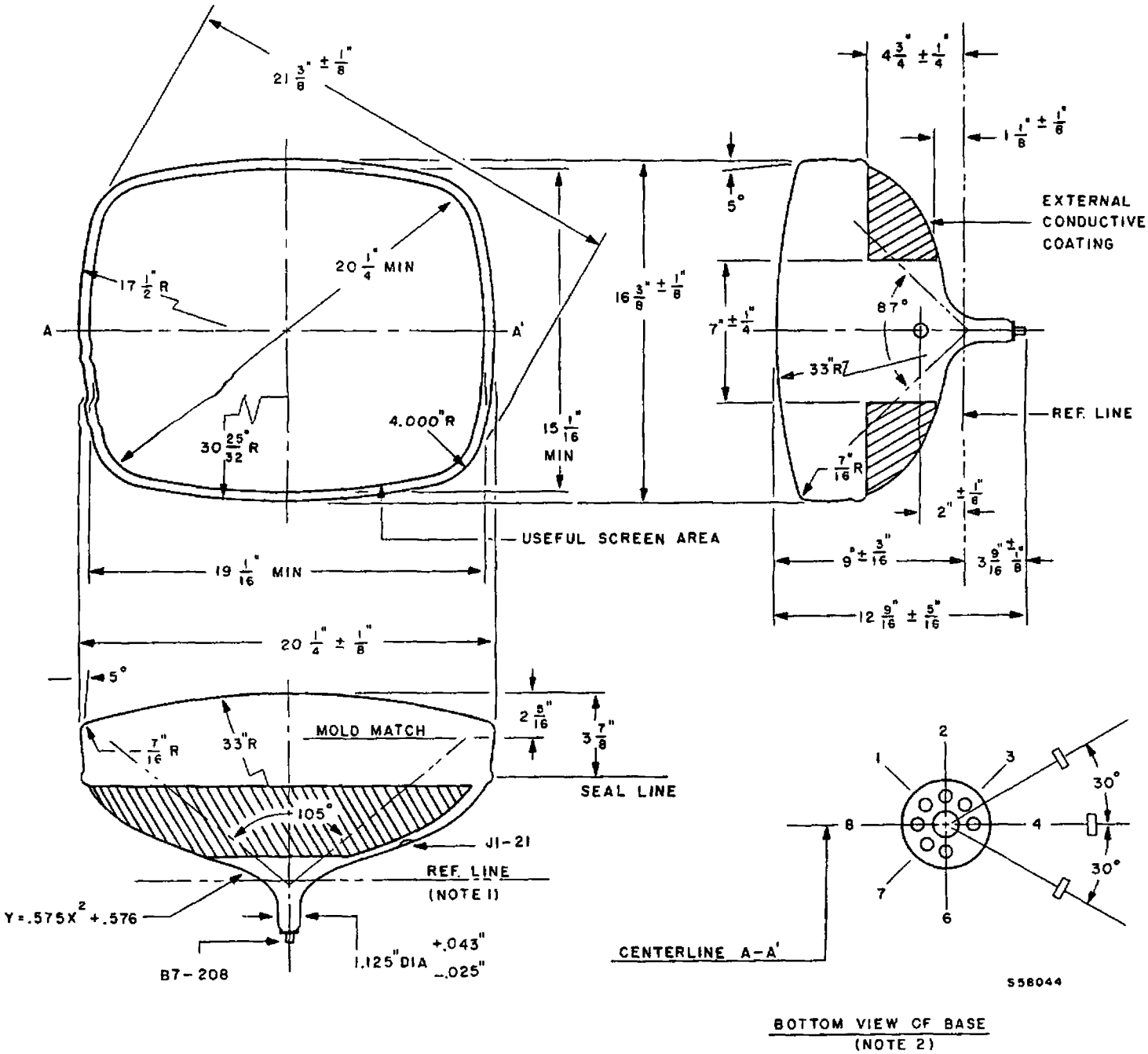

DIAGRAM NOTES:

1. Reference line is determined by plane C-C[1] of JETEC No. 126 Reference Line Gauge, when the gauge is seated against the bulb.

2. Base Pin No. 4 aligns with horizontal centerline (A-A') within 30° and is on same side as anode contact, J1-21.