ADVANCE DATA

CHARACTERISTICS

GENERAL DATA

Focusing Method	Electrostatic	
Deflection Method	Magnetic	
Deflection Angles (Approx.)		
Horizontal	85	Degrees
Diagonal	90	Degrees
Phosphor	Aluminized P4	
Fluorescence	White	
Persistence	Short to Medium	
Faceplate	Gray Filter Glass	
Light Transmittance (Approx.)	75	Percent

ELECTRICAL DATA

Heater Voltage	6.3	Volts
Heater Current	0.30 ± 5%	Ampere
Heater Warm-up Time[1]	11	Seconds
Direct Interelectrode Capacitances (Approx.)		
Cathode to All Other Electrodes	5	μμf
Grid No. 1 to All Other Electrodes	6	μμf
External Conductive Coating to Anode[2]	2500	μμf Max.
	2000	μμf Min.
Ion Trap Magnet	External, Single Field Type	

MECHANICAL DATA

Minimum Useful Screen Dimensions (Maximum Assured)	19 1/16 x 15 1/16	Inches
Minimum Useful Screen Area	262	Sq. Inches
Bulb	J171D or J171E	
Bulb Contact (Recessed Small Cavity Cap)	J1-21	
Base (Small Shell Duodecal 6-Pin)	B6-63	
Basing	12L	
Weight (Approx.)	22 1/2	Pounds

RATINGS

MAXIMUM RATINGS (Absolute Maximum Values)

Anode Voltage	22,000	Volts	dc
Grid No. 4 Voltage (Focusing Electrode)	-550 to +1100	Volts	dc
Grid No. 2 Voltage	550	Volts	dc
Grid No. 1 Voltage			
Negative Bias Value	155	Volts	dc
Negative Peak Value	220	Volts	
Positive Bias Value	0	Volts	dc
Positive Peak Value	2	Volts	

from JETEC release #2317, Nov. 17, 1958

QUICK REFERENCE DATA

Television Picture Tube
21" Direct Viewed
Rectangular Glass Type
Spherical Faceplate
Gray Filter Glass
90° Magnetic Deflection
Electrostatic Focus
Single Field Ion Trap
External Conductive Coating
Aluminized Screen
6.3 Volt, 300 Ma Heater

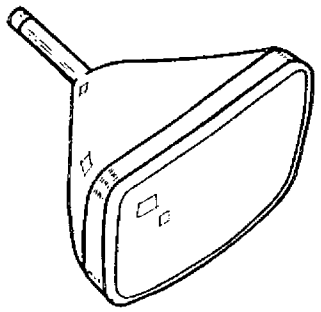

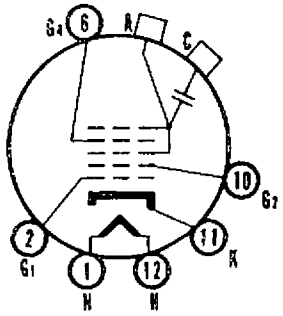

12-L

SYLVANIA ELECTRIC PRODUCTS INC.
Picture Tube Operations
SENECA FALLS, NEW YORK

Prepared and Released By The
TECHNICAL PUBLICATIONS SECTION
EMPORIUM, PENNSYLVANIA

October 17, 1958

MAXIMUM RATINGS (Absolute Maximum Values) (Cont'd)

Peak Heater-Cathode Voltage		
Heater Negative with Respect to Cathode		
During Warm-up Period not to Exceed 15 Seconds	450	Volts
After Equipment Warm-up Period	200	Volts
Heater Positive with Respect to Cathode	200	Volts

TYPICAL OPERATING CONDITIONS

Anode Voltage	16,000	Volts	dc
Grid No. 4 Voltage for Focus	-64 to +352	Volts	dc
Grid No. 2 Voltage	300	Volts	dc
Grid No. 1 Voltage Required for Cutoff[3]	-35 to -72	Volts	dc
Ion Trap Magnet Current (Average)[4]	30	Ma	dc
Field Strength of PM Ion Trap Magnet[5]	33	Gausses	Min.

CIRCUIT VALUES

Grid No. 1 Circuit Resistance	1.5	Megohms	Max.

NOTES:

1. Heater warm-up time is defined as the time required for the voltage across the heater to reach 80% of the rated heater voltage after applying four (4) times rated heater voltage to a circuit consisting of the tube heater in series with a resistance equal to three (3) times the rated heater voltage divided by the rated heater current.

2. External conductive coating must be grounded.

3. Visual extinction of focused raster. Extinction of stationary focused spot will require that these values be about 5 volts more negative.

4. For JETEC Ion Trap Magnet No. 117 with pole pieces centered over Grid No. 2 on mount, and rotated for maximum brightness.

5. For typical PM ion trap magnet with field strength tolerance of ±3 gausses.

WARNING:

X-ray radiation shielding may be necessary to protect against possible danger of personal injury from prolonged exposure at close range if this tube is operated at higher than the manufacturer's Maximum Rated Anode Voltage or 16,000 volts, whichever is less.

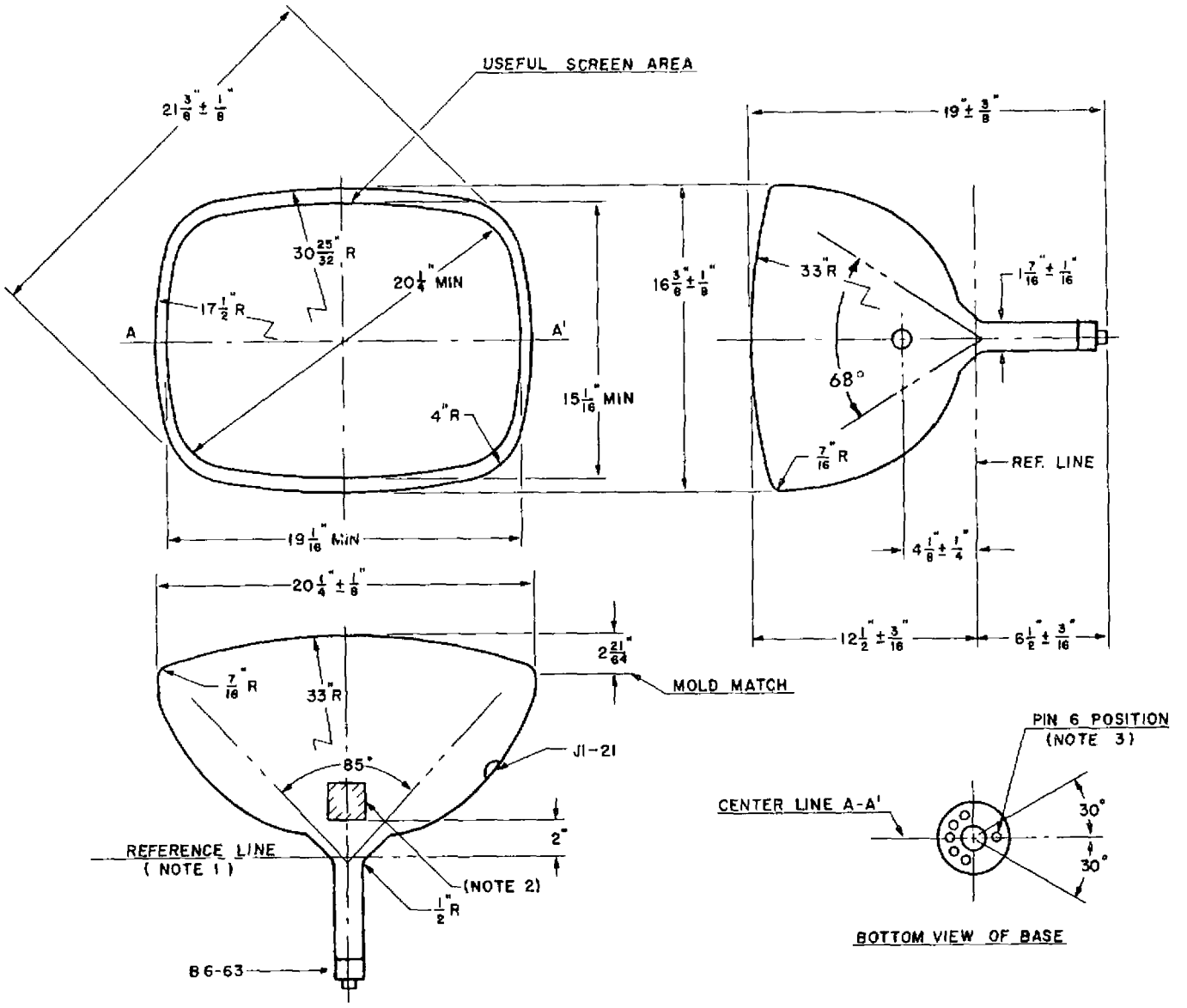

DIAGRAM NOTES:

1. Reference line is determined by the plane C-C' of the reference line gauge (JETEC No. 116) when the gauge is seated against the glass cone.

2. Contact area for external conductive coating, 2" x 2", located 90 degrees counterclockwise from anode contact as viewed from base end of tube.

3. Pin position No. 6 aligns with horizontal centerline within 30°, and is on same side as anode contact J1-21.