December 8, 1958

TELEVISION PICTURE TUBE TYPE 21EMP4

110° Magnetic Deflection
Rectangular Glass
Aluminized
Neutral Gray Glass

4-3/16" Neck Length

External Conductive Coating
Spherical Faceplate
No Ion Trap
19-1/16" x 15-1/16" Picture

ELECTRICAL:

Cathode	Coated Unipotential	
Heater:		
Voltage (ac or dc)	6.3	Volts
Current	0.60	Ampere
Direct Interelectrode Capacitances:		
Grid 1 to all other Electrodes	6	uuf
Cathode to all other Electrodes	5	uuf
External Conductive Coating to Anode:		
Maximum	2500	uuf
Minimum	2000	uuf
Screen:		
Phosphor	Aluminized P-4	
Fluorescence	White	
Persistance	Short	
Focusing Method	Low Voltage Electrostatic	
Deflection Method	Magnetic	
Horizontal Angle	105°	
Vertical Angle	87°	
Diagonal Angle	110°	
No Ion Trap	No Magnet Required	

MECHANICAL:

Mounting Position	Any	
Screen Dimensions: Minimum		
Height	15-1/16"	
Width	19-1/16"	
Diagonal	20-1/4"	
Area	262 sq. Inches	
Faceplate	Spherical	
Glass	Neutral Gray	
Transmission	74%	
Bulb Dimensions: Bulb No.	J171H1 or Equiv.	
Height	16-3/8" ± 1/8"	
Width	20-1/4" ± 1/8"	
Diagonal	21-3/8" ± 1/8"	
Overall Length	13-3/16" ± 5/16"	
Neck Length	4-3/16" ± 1/8"	
Anode Terminal	JETEC J1-21	
Base	JETEC B7-208	
Basing	8HR	
Net Weight	23 Pounds	

MAXIMUM RATINGS:

Design Center Values

Anode Voltage	18000▲	max.	Volts
Grid 4 Voltage:			
Positive Value	1000	max.	Volts
Negative Value	500	max.	Volts
Grid 2 Voltage	500	max.	Volts
Grid 1 Voltage:			
Positive Bias Value	0	max.	Volts
Positive Peak Value	0	max.	Volts
Negative Bias Value	140	max.	Volts
Negative Peak Value	200	max.	Volts
Peak Heater-Cathode Voltage:			
Heater Negative with respect to Cathode #	180	max.	Volts
Heater Positive with respect to Cathode	180	max.	Volts

TYPICAL OPERATING CONDITIONS:

Anode Voltage♦	16000	Volts
Grid 4 Voltage	0 to + 400	Volts
Grid 2 Voltage■	450	Volts
Grid 1 Voltage for Raster Cutoff	-45 to -105	Volts

LIMITING CIRCUIT VALUES:

Grid 4 Resistance to Voltage Source■	10000	min.	Ohms
Grid 2 Resistance to Voltage Source■	10000	min.	Ohms
Grid 1 Circuit Resistance	1.5	max.	Megohms

♦ Operation with anode voltage or anode to grid 1 voltage less than 11000 volts is not recommended.

■ It is recommended that Grid 2 be operated at a voltage greater than 300 volts since resolution is affected at lower voltages.

■ Protective resistance in the grid 4 and grid 2 circuits is advisable to prevent damage to the tube. If applicable, one resistor common to both circuits may be used.

▲ Inasmuch as the tube rating permits operation at voltages as high as 19.8 kilovolts (absolute value), shielding of the tube for x-ray radiation may be needed when operating conditions involve voltages in excess of 16 kilovolts.

During 15 second warmup period this value may be 410 max. volts.

Note: With a minimum neck length tube, the PM centering magnet (0 to 8 gaus) should extend no more than 2-1/8" from the yoke reference line.

from JETEC release $2347, Dec. 29, 1958

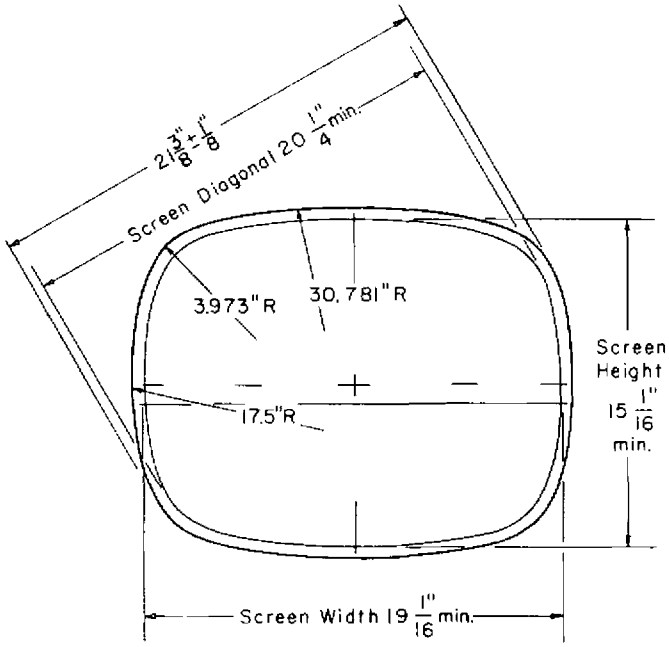

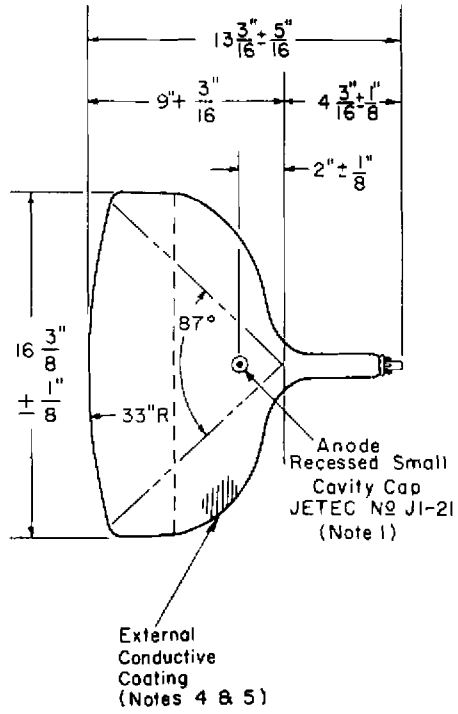

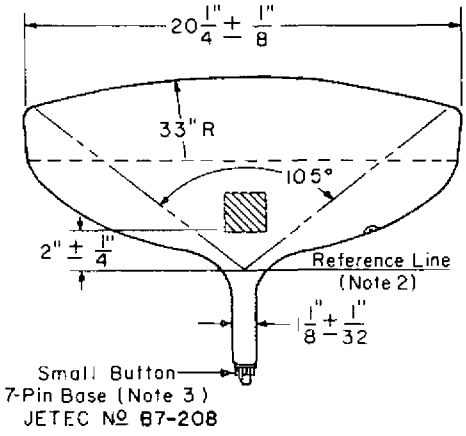

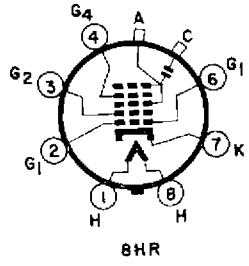

CE-C1415

NOTE 1: The plane through the tube axis and base pin 4 may vary from the plane through the tube axis and the anode terminal by an angular tolerance of ±30°. The anode terminal is on the same side of the tube as pin 4.

NOTE 2: With the tube neck inserted through the flared end of Reference Line Gauge JETEC No. 126 and with the tube seated in the gauge, the reference line is determined by the intersection of the plane face of the flared end of the gauge with the tube funnel.

NOTE 3: The socket should not be mounted rigidly, but should be allowed to move freely and have flexible leads. The associated wiring should not impress lateral strains on the base pins. The bottom circumference of the base wafer will lie within a circle concentric with the bulb axis and having a diameter of 1-3/4".

NOTE 4: External conductive coating forms supplementary filter capacitor and must be grounded.

NOTE 5: Contact area of external conductive coating 2" min. × 2" min. located 2" ± 1/4" from Reference Line 90° counterclockwise from anode button as viewed from base end of tube.