GENERAL INFORMATION

The Sylvania Types 21CYP22, 21CYP22A, 21FBP22, 21FJP22, and 21FKP22 are direct viewed round glass picture tubes for use in color television receivers. They are capable of producing either a full color or black and white picture measuring 19 ¼ x 15 ½ inches with rounded sides and having a projected area of 261 square inches.

These tubes utilize three electrostatic focus guns spaced 120 degrees apart with axes tilted toward the tube axis to facilitate convergence of the three beams at the shadow mask; individual convergence control of each beam radially by internal magnetic poles; and supplemental control of the three beams horizontally by internal magnetic poles; and an assembly consisting of a spherical metal graded-hole shadow mask and a tri-color, phosphor dot screen on the inner surface of the spherical Filterglass faceplate.

The tri-color, phosphor dot screen is composed of an orderly array of small, closely spaced, phosphor dots arranged in triangular groups. Each group consists of a green-emitting dot, a red-emitting dot, and a blue-emitting dot, and is aligned with a corresponding hole in the shadow mask.

CHARACTERISTICS

GENERAL DATA

Focusing Method	Electrostatic
Deflection Method	Magnetic
Convergence Method	Magnetic
Deflection Angles (Approx.)	
Horizontal	70 Degrees
Vertical	55 Degrees
Screen Type	Aluminized, Three-Color, Phosphor Dot
Phosphor, Blue-Green-Red Dots	P22
Persistence	Medium
Arrangement	Triangular Groups Each Consisting of Blue Dot, Green Dot and Red Dot
Spacing Between Center of Adjacent Dot Trios (Approx.)	.029 Inches
Faceplate (Spherical)	Filter Glass
Light Transmittance (Approx.)	
Faceplate (21FBP22, 21FJP22, 21FKP22)	73 ½ ± 3 Percent
Faceplate (21CYP22A)	72 Percent
Bonded Shield (21FJP22, 21FKP22)	61 Percent
Combined Faceplate and Bonded Shield (21FJP22, 21FKP22)	45 ± 4 Percent

Surface of Bonded Shield (21FJP22) Treated to Reduce Specular Reflection.

ELECTRICAL DATA

	21FBP22 21FJP22 21FKP22	21CYP22A	
Heater Voltage (±10 %)	6.3	6.3 Volts	
Heater Current (Approx.)	1.8	1.6 Amperes	
Direct Interelectrode Capacitances (Approx.)			
Grid No. 1 of Any Gun to All Other Electrodes (Except Grid No. 1 of Other Guns)	10	7 pf	
Cathode of Blue Gun + Cathode of Green Gun + Cathode of Red Gun to All Other Electrodes	16	16 pf	
Grid No. 3 (Of All Guns Tied Together) to All Other Electrodes	9	9 pf	
Ex. Conductive Coating to Anode	2500	2500 pf	Max.
	2000	2000 pf	Min.

QUICK REFERENCE DATA

Color Television Picture Tube
21" Direct Viewed
Round Glass Type
Magnetic Deflection
Filter Glass
Spherical Faceplate
Electrostatic Focus
Magnetic Convergence
Aluminized Screen
Three Electron Gun Type
21CYP22A supersedes and replaces 21CYP22
21FJP22, 21FKP22: Bonded Shield
21FJP22: Anti-Reflection Treated

21CYP22A

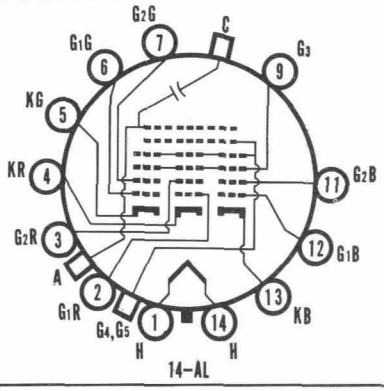

21FBP22
21FJP22
21FKP22

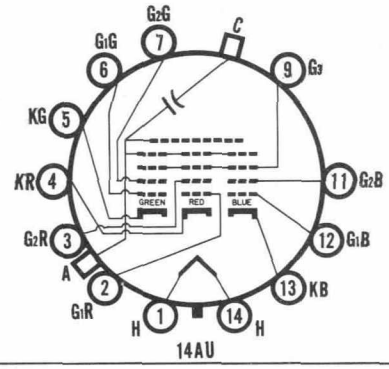

SYLVANIA
ELECTRONIC TUBES

A Division of
Sylvania Electric Products Inc.

PICTURE TUBE
OPERATIONS

SENECA FALLS, NEW YORK

Prepared and Released By The
TECHNICAL PUBLICATIONS SECTION
EMPORIUM, PENNSYLVANIA

SEPTEMBER, 1963

File Under
TELEVISION PICTURE TUBES

MECHANICAL DATA

	21FJP22 21FKP22	21CYP22A 21FBP22
Minimum Useful Screen Dimensions (Maximum Assured)	19 ¼ x 15 ½	19 ¼ x 15 ½ Inches
Minimum Useful Screen Area	261	261 Sq. Inches
Overall Length	$25\frac{9}{32} \pm \frac{3}{8}$	$25\frac{1}{32} \pm \frac{3}{8}$ Inches
Diameter	21 Max.	$20\frac{13}{16} \pm \frac{1}{8}$ Inches
Anode Terminal (Recessed Small Cavity)	J1-21	J1-21
Base (Small Shell Neodiheptal 12-Pin)	B12-131	B12-131
Basing	14AU	14AU for 21FBP22 14AL for 21CYP22A
Operation Position (Base Pin 12 and V Grooved Panel Pad on Top)	Tube Axis Horizontal	
Weight (Approx.)	43	36 ½ Pounds

RATINGS

Unless otherwise specified, voltage values are positive with respect to cathode of specified gun

MAXIMUM RATINGS (Design Maximum Values)

	21FBP22 21FJP22 21FKP22	21CYP22A See Note 5	
Anode[1]-to-Cathode (Of Each Gun) Voltage	27,500	27,500 Volts	Max.
Grid No. 3-to-Cathode (Of Each Gun) Voltage	6000	6600 Volts	Max.
Grid No. 2-to-Cathode Voltage + Video Signal Voltage (Each Gun)	1000	660 Volts	Max.
Grid No. 1-to-Cathode Voltage (Each Gun)			
Operating Cutoff Value	200	Volts	
Negative Bias Value	400	440 Volts	Max.
Positive Bias Value	0	0 Volt	Max.
Positive Peak Value	2	2 Volts	Max.
Peak Heater-Cathode Voltage (Each Gun)			
Heater Negative with Respect to Cathode			
During Warm-up Period Not to Exceed 15 Seconds	450	450 Volts	Max.
After Equipment Warm-up Period	200	200 Volts	Max.
Heater Positive with Respect to Cathode	200	200 Volts	Max.
Maximum Anode Current, Long Term Average	1000	μa	

EQUIPMENT DESIGN RANGES

Anode Voltage (Ec4k Each Gun) Between 20,000[2] and 27,500 Volts (21CYP22A, 21FBP22, 21FJP22, 21FKP22)

Grid No. 3 (Focusing Electrode)-to-Cathode (Of Each Fun) Voltage . . . . . 16.8 % to 20 % of Ec4k Each Gun Volts

Grid No. 2-to-Cathode Voltage (Each Gun)
When Circuit Design Utilizes Grid No. 1-to-Cathode Voltage (Ec1K) of 70 Volts for Raster Cutoff . . . . . 130 to 370 Volts

Grid No. 2-to-Cathode Voltage (Each Gun)
When Circuit Design Utilizes Grid No. 1-to-Cathode Voltage (Ec1K) of 165 Volts for Raster Cutoff . . . . . 355 to 1010 Volts

Grid No. 1-to-Cathode Voltage (Each Gun)
For Visual Extinction of Focused Raster when Circuit Design Utilizes Grid No. 2-to-Cathode Voltage (Ec2K) of 200 Volts . . . . . −45 to −100 Volts

Grid No. 1-to-Cathode Voltage (Each Gun)
For Visual Extinction of Focused Raster when Circuit Design Utilizes Grid No. 2-to-Cathode Voltage (Ec2K) of 550 Volts . . . . . −96 to −246 Volts

EQUIPMENT DESIGN RANGES (Cont'd)

Variation in Raster Cutoff Between Guns in Any Tube	±21 % of Average of Highest and Lowest Cutoff Values
Grid No. 3 Current	−45 to +45 μa
Grid No. 2 Current (Each Gun)	−5 to +5 μa

	21FBP22 21FJP22 21FKP22	21CYP22A (8500°K + 27MPCD)
Percentage of Total Anode Current Supplied by Each Gun to Produce White of 9300°K + 27MPCD (CIE Coordinates: X=.281; Y=.311)		
Red Gun	42	49 Percent
Blue Gun	28	18 Percent
Green Gun	30	33 Percent
Ratio of Cathode Currents (Typical) Each Gun to Produce White of 9300°K + 27MPCD		
Red to Green	1.4	1.5
Red to Blue	1.5	2.7
Maximum Raster Centering Correction in Any Direction	⅞ In.	⅞ Inch
Maximum Compensation to be Provided by the Following Components:		
Purifying Magnet Maximum Required Displacements of Beam Trios in Any Direction with Respect to Associated Phosphor Dot Trios	0.005 In.[4]	0.005 Inch[4]
Lateral-Converging Magnet After Adjustment has been made for Color Purity and Dynamic Convergence (Maximum Lateral Shift of Blue Beam)	± ¼ In.	± ¼ Inch
Radial-Converging Magnet Assembly For Static Convergence after Adjustment has been made for Optimum Color Purity and Dynamic Convergence (Each Beam)	Shift of ±⅝ In.	Shift of ±⅝ Inch

EXAMPLES OF USE DESIGN RANGES

	For All Types	
Anode Voltage	20,000	25,000 Volts
Grid No. 3 (Focusing Electrode)-to-Cathode (Of Each Gun) Voltage	3360 to 4000	4200 to 5000 Volts
Grid No. 2- to-Cathode Voltage (Each Gun) When Circuit Design Utilizes Grid No. 1-to-Cathode Voltage of −70 Volts for Raster Cutoff	130 to 370	130 to 370 Volts
Grid No. 2-to-Cathode Voltage (Each Gun) When Circuit Design Utilizes Grid No. 1-to-Cathode Voltage of −165 Volts for Raster Cutoff	355 to 1010	355 to 1010 Volts
Grid No. 1-to-Cathode Voltage (Each Gun) For Visual Extinction of Focused Raster When Circuit Design Utilized Grid No. 2-to-Cathode Voltage of 200 Volts	−45 to −100	−45 to −100 Volts
Grid No. 1-to-Cathode Voltage (Each Gun) For Visual Extinction of Focused Raster When Circuit Design Utilized Grid No. 2-to-Cathode Voltage of 550 Volts	−96 to −246	−96 to −246 Volts

LIMITING CIRCUIT VALUES

High Voltage Circuits

In order to minimize the possibility of damage to the tube caused by a momentary internal arc, it is recommended that the anode power supply and the Grid No. 3 power supply be of the limited-energy type.

In equipment utilizing a well-regulated anode power supply, the Grid No. 3 circuit resistance should be limited to 7.5 Megohms.

Low Voltage Circuits

Grid No. 1 Circuit Resistance (Each Gun) . . . . . 0.75 Megohms Max.

When the cathode of each gun is not connected directly to the heater, the Grid No. 1-to-Heater Circuit, and the Cathode-to-Heater Circuit should each have an impedance such that their respective power sources in combination will not supply an instantaneous or continuous short-circuit current of more than 300 milliamperes total. Such current limitation will prevent heater burn-out in case of a momentary internal arc within the tube.

NOTES:

1. *The anode in a cathode-ray tube is the electrode to which is applied the highest d c voltage for accelerating the electrons in the beam prior to its deflection. In this tube the anode function is performed by Grid No. 4. Since Grid No. 4 and Grid No. 5 are connected together within the tube, they are collectively referred to simply as anode for convenience in presenting data.*
2. *Brilliance and definition decrease with decreasing anode voltage. In general, the anode voltage should not be less than 20,000 volts.*
3. *Centering of the raster on the screen is accomplished by passing direct current of the required value through each pair of deflecting coils. With all components properly adjusted, the raster centering correction is the distance from the undeflected focused beams to the center of the screen.*
4. *The equivalent raster movement is about ¾″.*
5. *Between the anode terminal and the high voltage-supply terminal (see dimensional outline), it is necessary to connect a resistor of 50,000 ohms. The high voltage must be connected to the high voltage-supply terminal, never directly to the anode terminal.*

GENERAL CONSIDERATIONS

X-RADIATION WARNING. Because these tubes are designed to be operated at anode voltages as high as 27.5 kilovolts (design-maximum value), shielding of the bulb for X-radiation may be needed to protect against possible injury from prolonged exposure at close range.

TUBE HANDLING. The bulb should be handled carefully as required by any glass picture tube. Particular care should be taken to prevent damage to the seal area.

SHATTER-PROOF COVER OVER THE TUBE FACE. Following conventional picture tube practice, it is recommended that the cabinet be provided with a shatter-proof, glass cover over the face of the tube to protect it from being struck accidentally and to protect against possible damage resulting from tube implosion under some abnormal condition. This safety cover can also provide X-ray protection when required. This applies only to 21CYP22, 21CYP22A, and 21FBP22.

Types 21FJP22 and 21FKP22 have integral gray filter glass safety plate laminated directly to face of tube.

ORIENTATION. The tube must be operated with tube axis in a horizontal position and with the blue gun uppermost (i.e., base pin 12 and V-grooved panel pad on top). This operating position is required to take advantage of the correction built into the tube for the vertical component of the earth's magnetic field in the northern hemisphere, and is the position for which the beam-displacement values shown in this bulletin apply.

The deflection yoke should not be used for supporting the picture tube because it should be centered on the neck and be free to move along the neck for a distance of approximately ⅝ inch from its most forward position for adjustment purposes. The yoke mount should also provide for a small amount of rotational adjustment.

If a yoke liner is employed such as to support the yoke on the neck of the tube, the liner should be of such thickness that the yoke will be held back from the funnel no more than 3/32″ when located in its most forward position.

MISREGISTER COMPENSATION. Proper operation requires compensation for the effects of extraneous magnetic fields, the earth's magnetic field, and other causes which may produce misregister. Compensation for these effects may be accomplished by the use of a purifying magnet.

The purifying magnet, designed to provide a magnetic field adjustable in magnitude and direction, effects register over the entire area of the screen.

OUTLINE
21CYP22, 21CYP22A

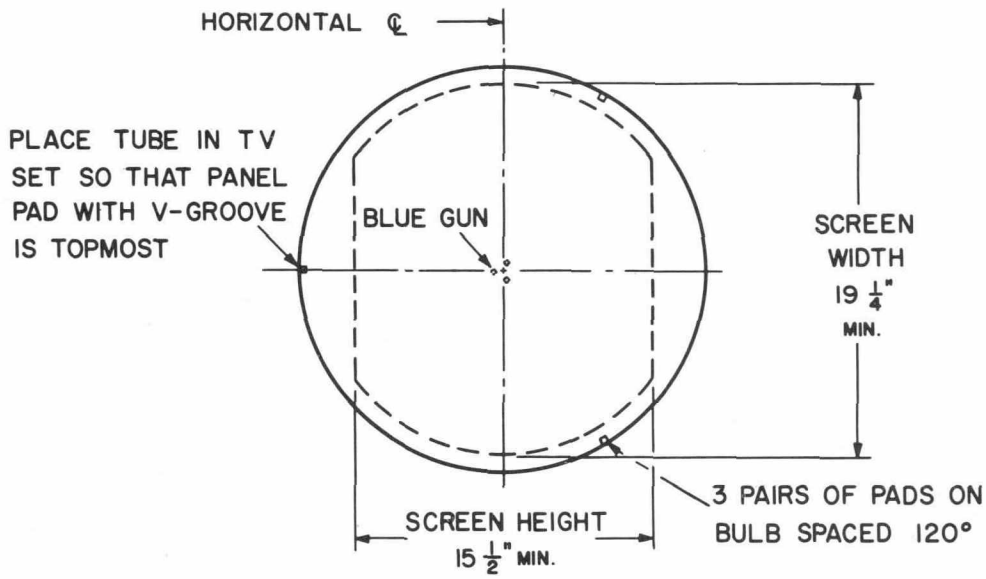

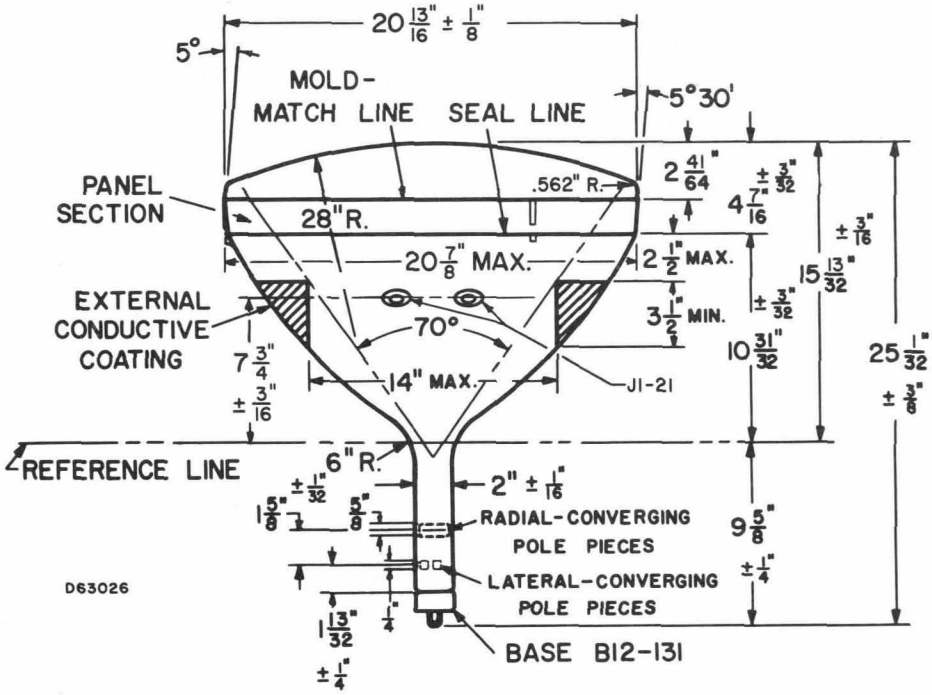

OUTLINE
21FBP22

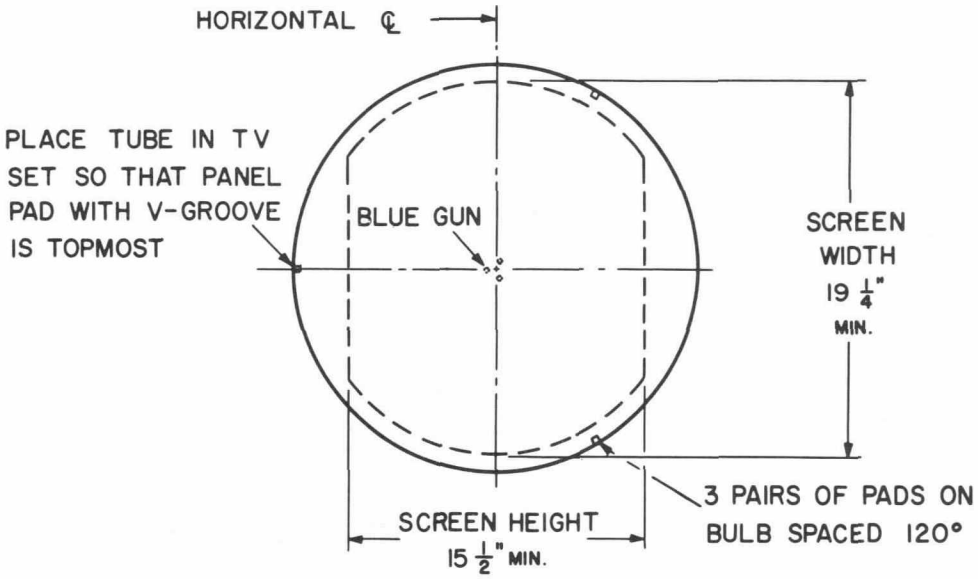

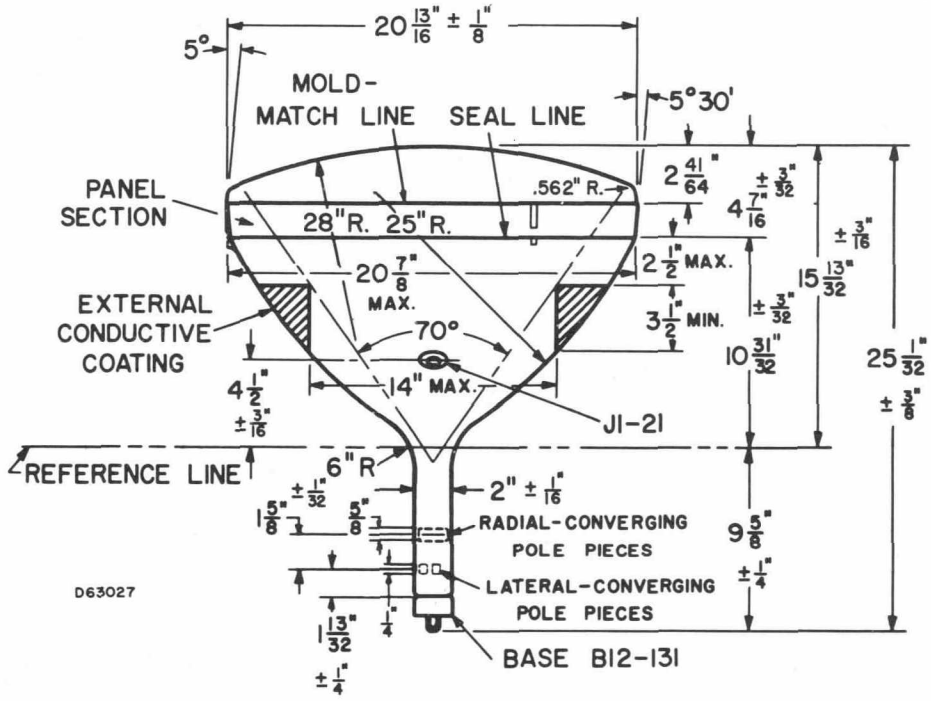
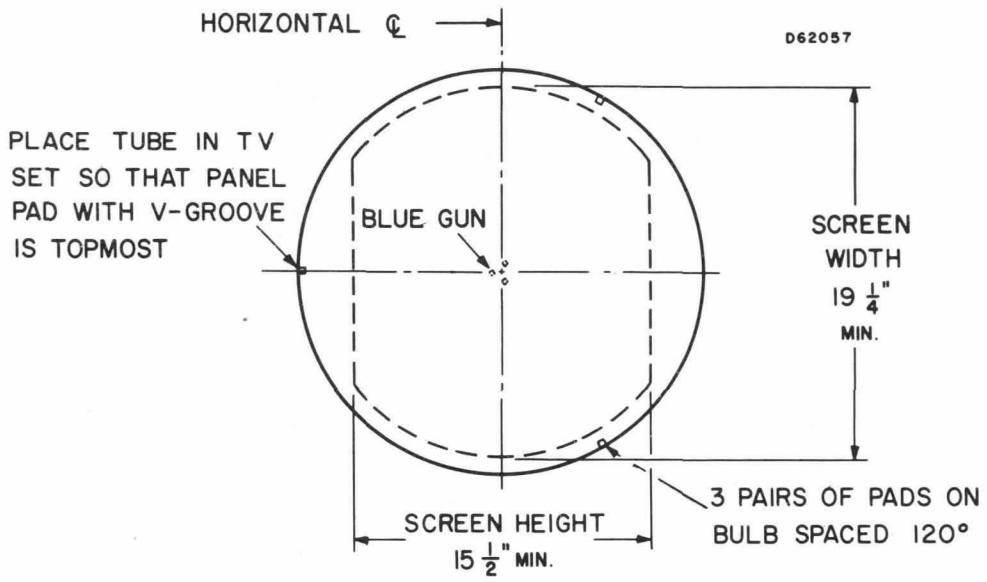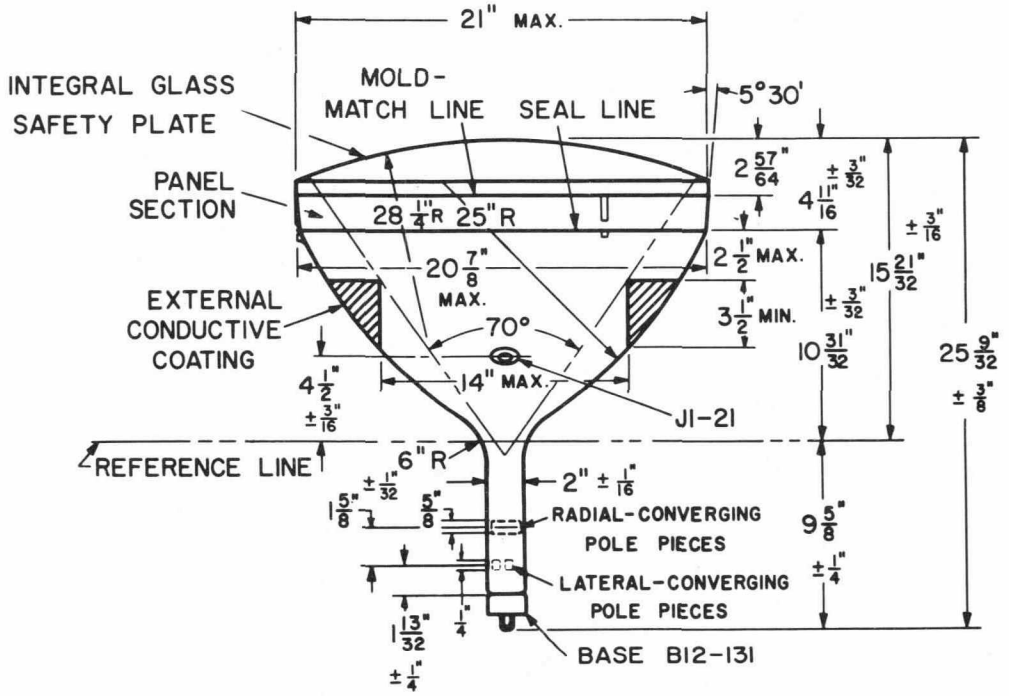
OUTLINE
21FJP22, 21FKP22