Cathode-Ray Tube Type 21CXP4

The 21CXP4 is a 21" 90° rectangular, electrostatic focus and magnetic deflection direct-view picture tube specifically intended for cathode drive television applications. It has a maximum spot cut-off of 50 volts and a minimum cathode current of 1000 microamperes when operated in cathode drive at a Grid No.2 voltage of 50 volts. Other features of this tube are a short overall length, spherical gray filter glass faceplate, metal-backed screen, a construction which does not require an external ion trap magnet, and an external conductive coating which serves as a filter capacitor when grounded and has a minimum of 3 additional contact areas for the suppression of radiation.

GENERAL DATA

Focusing Method	Electrostatic
Deflection Method	Magnetic
Deflection Angles (approx.)	
Horizontal	85 Degrees
Diagonal	90 Degrees
Phosphor	Aluminized P4
Fluorescence	White
Persistence	Medium
Faceplate	Gray Filter Glass
Light Transmittance (approx.)	74 Percent

ELECTRICAL DATA

Heater Voltage	6.3 Volts
Heater Current	0.6 ± 10% Amperes
Direct Interelectrode Capacitances (approx.)	
Cathode to All Other Electrodes	5 uuf
Grid No.1 to All Other Electrodes	6 uuf
External Conductive Coating to Anode[1]	2500 uuf Max.
	2000 uuf Min.

MECHANICAL DATA

Overall Length	18 ± 3/8 Inches
Greatest Bulb Dimensions	
Diagonal	21 3/8 ± 1/8 Inches
Width	20 1/4 ± 1/8 Inches
Height	16 3/8 ± 1/8 Inches
Neck Length	5 1/2 ± 3/16 Inches
Minimum Useful Screen Dimensions (Maximum Assured)	19 1/16 x 15 1/16 Inches
Minimum Useful Screen Area	262 Sq. Inches
Bulb Contact - Recessed Small Cavity Cap	J1-21
Base - Small Shell Duodecal 6-pin	B6-63
Basing	12L
Bulb Contact Alignment - J1-21 Contact Aligns with Pin Position No.6 ± 30 Degrees	

MAXIMUM RATINGS (Absolute Maximum Values)

Final Anode Voltage[2]	22,000 Volts dc
Grid No.4 Voltage (Focusing Electrode)[3]	-550 to + 1,100 Volts dc
Grid No.2 to Grid No.1 Voltage	70 Volts dc

from JETEC release #1902, April 15, 1957

Cathode-Ray Tube Type 21CXP4

MAXIMUM RATINGS (Absolute Maximum Values)	
Cathode to Grid No.1 Voltage	
Positive Bias Value	150 Volts
Negative Peak Value	0 Volts
Peak Heater-Cathode Voltage	
During Warm-up Period not to Exceed 15 Seconds	450 Volts
After Equipment Warm-Up Period	200 Volts
Heater Positive with Respect to Cathode	200 Volts
TYPICAL OPERATING CONDITIONS	
Anode Voltage	18,000 Volts dc
Grid No.4 to Grid No.1 Voltage for Focus at 100 ua Cathode Current	0 to 350 Volts dc
Grid No.2 to Grid No.1 Voltage	50 Volts dc
Cathode to Grid No.1 Voltage for cut-off[4]	35 to 50 Volts dc
CIRCUIT VALUES	
Grid No.1 Circuit Resistance	1.5 Max.Megohms

NOTES

1. External conductive coating must be grounded.

2. Grid No.3, Grid No.5 and the Collector are connected internally and are referred to herein as "Final Anode".

3. The focus electrode may be modulated to improve overall focus.

4. For visual extinction of the undeflected focused spot. The cut-off voltage will change by approx. 2% with 1 KV change of anode voltage.

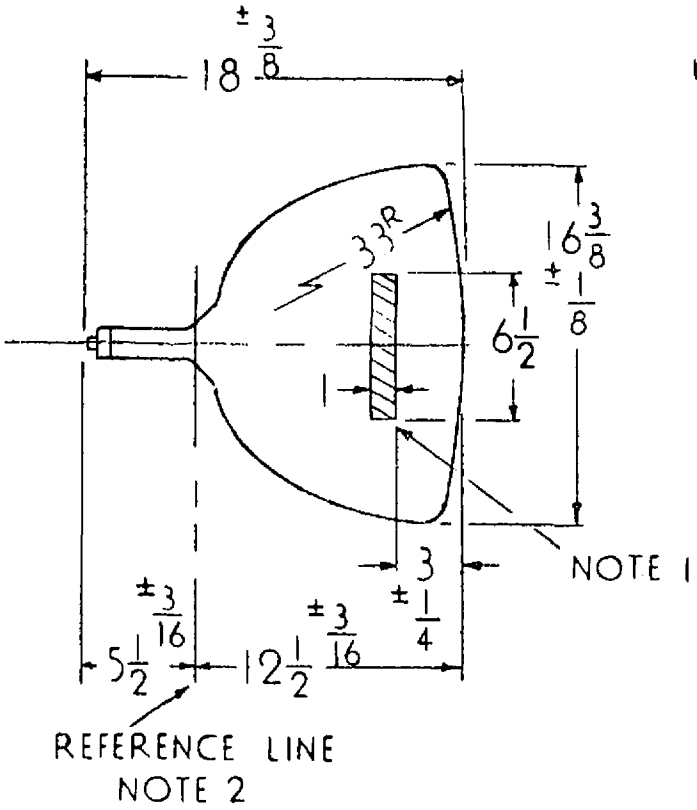

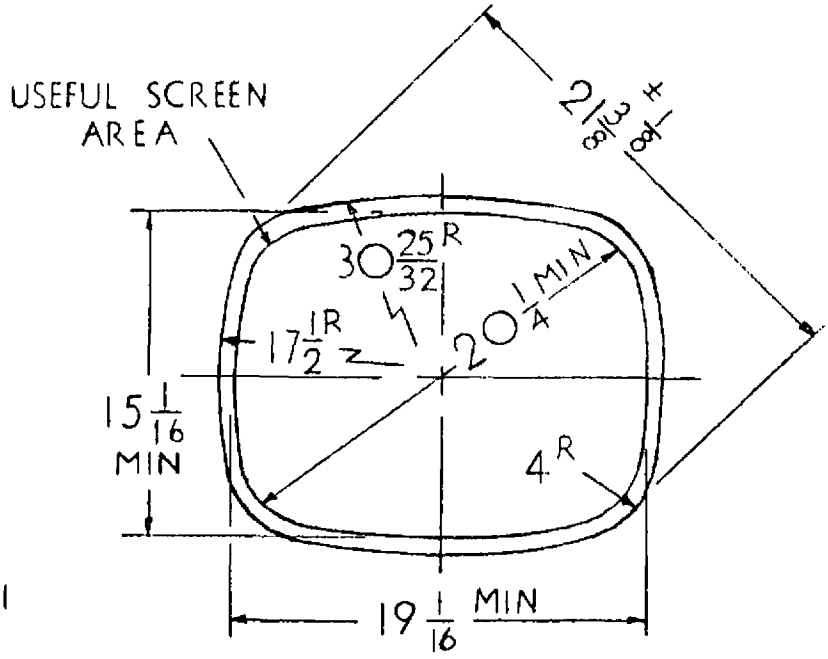

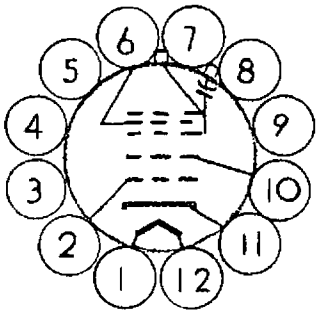

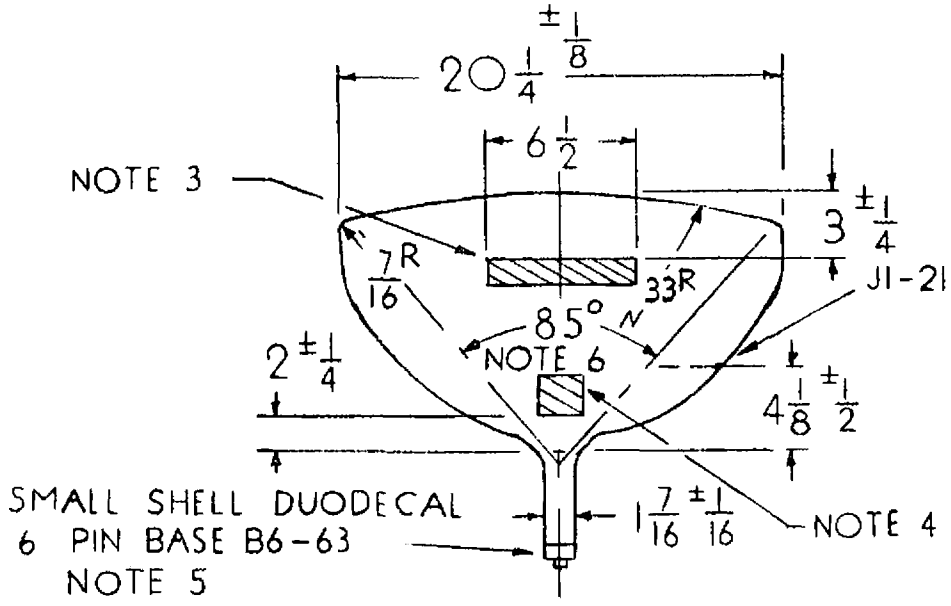

NOTES

1. 6 1/2" MIN. x 1" MIN.CONTACT AREA ON AT LEAST ONE SHORT SIDE OF BULB.
2. REFERENCE LINE AS DETERMINED BY PLANE C-C' OF REFERENCE LINE GAUGE RETMA #116.
3. 6 1/2" MIN. x 1" MIN. CONTACT AREA ON BOTH LONG SIDES OF BULB.
4. 2x2" MIN.CONTACT AREA LOCATED 90° COUNTERCLOCKWISE FROM ANODE BUTTON AS VIEWED LOOKING AT BASE OF TUBE.
5. PIN POSITION No.6 TO BE ALIGNED WITH ANODE BUTTON ∠ 30°.
6. DIAGONAL DEFLECTION ANGLE IS 90°.
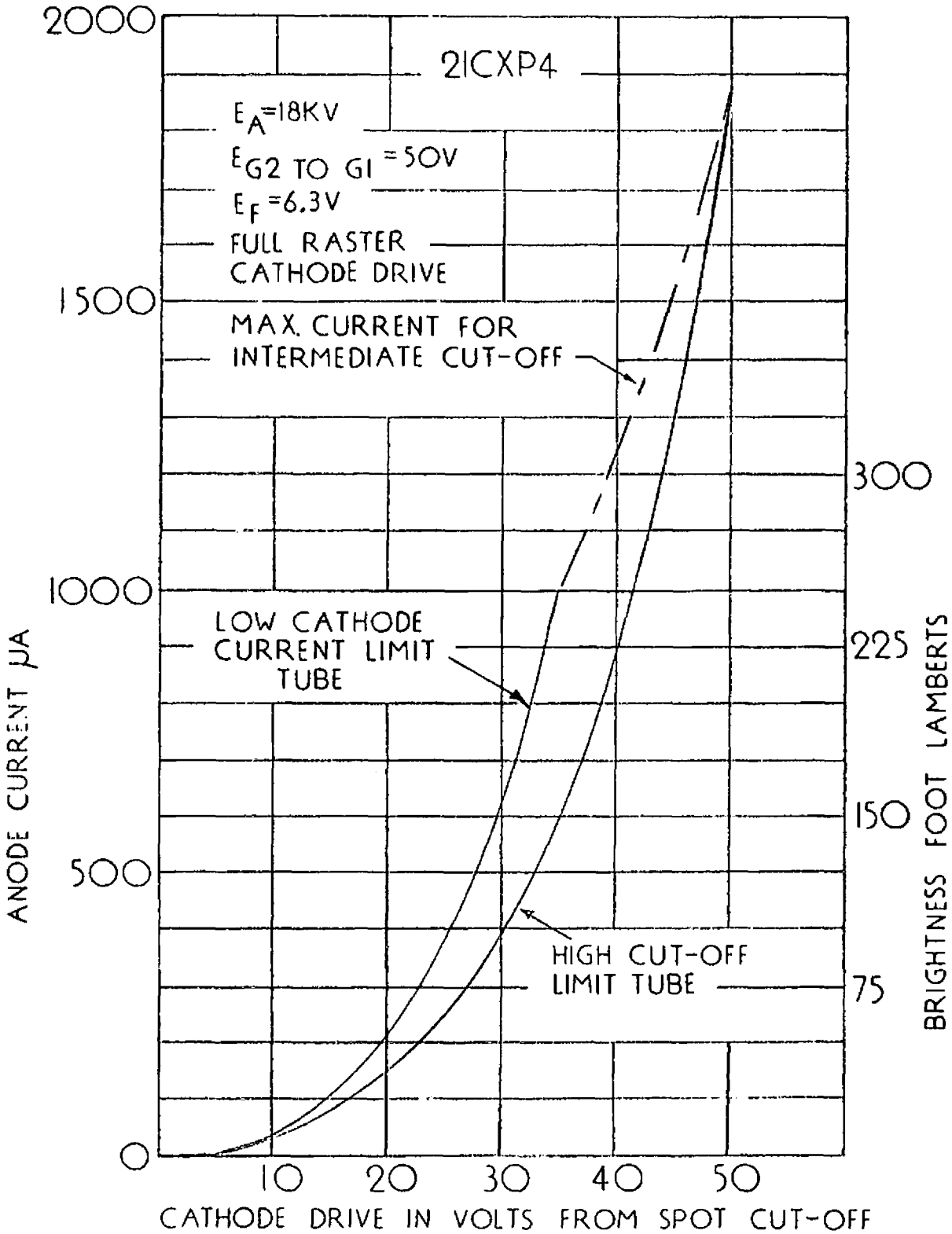
TYPICAL DRIVE CHARACTERISTICS CURVES