engineering data service

ADVANCE DATA

CHARACTERISTICS

GENERAL DATA

Focusing Method	Electrostatic	
Deflection Method	Magnetic	
Deflection Angles (approx.)		
Horizontal	105	Degrees
Diagonal	110	Degrees
Vertical	87	Degrees
Phosphor	Aluminized P4	
Fluorescence	White	
Persistence	Short to Medium	
Faceplate	Gray Filter Glass	
Light Transmittance (approx.)	75	Percent

ELECTRICAL DATA

Heater Voltage	6.3	Volts	
Heater Current	0.450 ±5%	Ampere	
Heater Warm-up Time [1]	11	Seconds	
Direct Interelectrode Capacitances (approx.)			
Cathode to All Other Electrodes	5	μμf	
Grid No. 1 to All Other Electrodes	6	μμf	
External Conductive Coating to Anode [2]	2500	μμf	Max.
	2000	μμf	Min.

MECHANICAL DATA

Minimum Useful Screen Dimensions (Maximum Assured)	19 1/16 x 15 1/16	Inches
Minimum Useful Screen Area	262	Sq. Inches
Bulb Contact (Recessed Small Cavity Cap)	J1-21	
Bulb	J171-C1 or equivalent	
Base	B6-185	
Basing	7FA	
Weight (approx.)	20	Pounds

RATINGS

MAXIMUM RATINGS (Absolute Maximum Values)

Anode Voltage	19,800	Volts	dc
Grid No. 4 Voltage (Focusing Electrode)	-550 to +1100	Volts	dc
Grid No. 2 Voltage	550	Volts	dc
Grid No. 1 Voltage			
Negative Bias Value	154	Volts	dc
Negative Peak Value	220	Volts	
Positive Bias Value	0	Volts	dc
Positive Peak Value	2	Volts	

from JETEC release #1969, July 1, 1957

QUICK REFERENCE DATA

Television Picture Tube
21" Direct Viewed
Rectangular Glass Type
Lightweight Tube
Spherical Faceplate
Gray Filter Glass
Aluminized Screen
Electrostatic Focus
110° Magnetic Deflection
1 1/8" Neck Diameter
No Ion Trap
External Conductive Coating
6.3 Volt, 450 Ma Heater

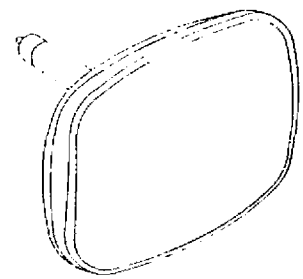

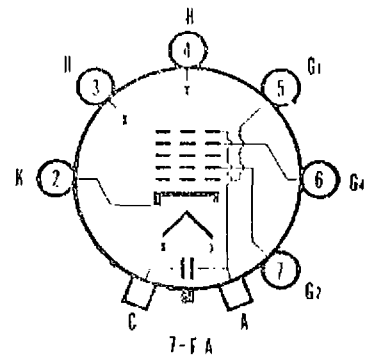

SYLVANIA ELECTRIC PRODUCTS INC.
TELEVISION PICTURE TUBE DIVISION
SENECA FALLS, NEW YORK

Prepared and Released By The TECHNICAL PUBLICATIONS SECTION EMPORIUM, PENNSYLVANIA

June 5, 1957

MAXIMUM RATINGS (Absolute Maximum Values) (Cont'd.)

Peak Heater-Cathode Voltage			
Heater Negative with Respect to Cathode			
During Warm-up Period not to Exceed 15 Seconds	450	Volts	
After Equipment Warm-up Period	200	Volts	
Heater Positive with Respect to Cathode	200	Volts	

TYPICAL OPERATING CONDITIONS

Anode Voltage	14,000	Volts	dc
Grid No. 4 Voltage for Focus	0 to 400	Volts	dc
Grid No. 2 Voltage	300	Volts	dc
Grid No. 1 Voltage Required for Cutoff [3]	-35 to -72	Volts	dc

CIRCUIT VALUES

Grid No. 1 Circuit Resistance	1.5	Megohms	Max.

NOTES:

1. Heater warm-up time is defined as the time required for the voltage across the heater to reach 80% of its rated value after applying four (4) times rated heater voltage to a circuit consisting of the tube heater in series with a resistance equal to three (3) times rated heater voltage divided by rated heater current.

2. External conductive coating must be grounded.

3. Visual extinction of focused raster. Extinction of stationary focused spot will require that these values be about 5 volts more negative.

WARNING:

X-ray radiation shielding may be necessary to protect against possible danger of personal injury from prolonged exposure at close range if this tube is operated at higher than the manufacturer's Maximum Rated Anode Voltage or 16,000 volts, whichever is less.

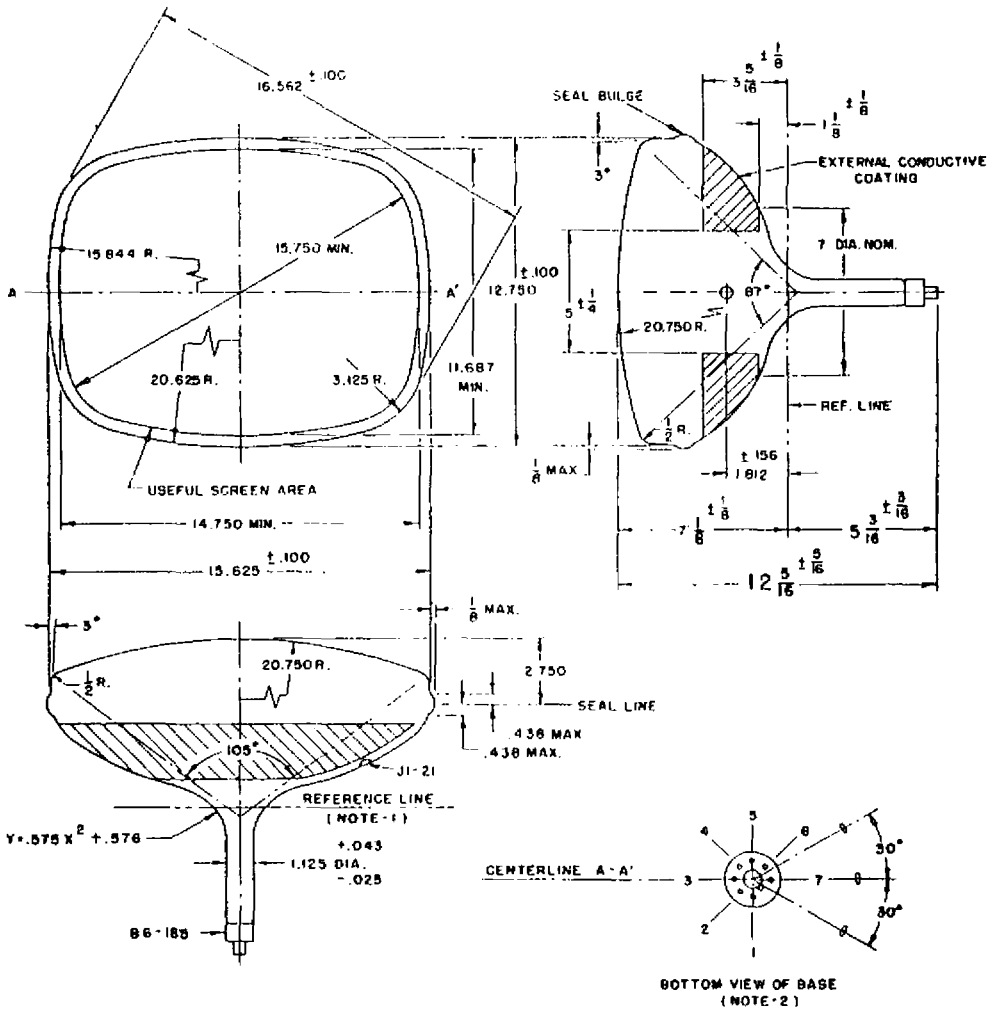

DIAGRAM NOTES:

1. Reference line is determined by plane C-C' of JETEC No. 126 Reference Line Gauge when the gauge is seated against the bulb.

2. Base pin No. 7 aligns with anode contact (J1-21) within 30°.

3. Dimensions are in inches.