SYLVANIA

engineering data service

SYLVANIA

21AXP22
21AXP22A

GENERAL INFORMATION

The Sylvania Type 21AXP22 and 21AXP22A are direct viewed, metal picture tubes for use in color television receivers. They are capable of producing either a full-color or black and white picture measuring 19 1/16 by 15 1/4 inches with rounded sides and having a projected area of 255 square inches.

The 21AXP22 and 21AXP22A each utilize three electrostatic focus guns spaced 120 degrees apart with axes tilted toward the tube axis to facilitate convergence of the three beams at the shadow mask; individual convergence control of each beam radially by internal magnetic poles and supplemental control of the blue beam tangentially by internal magnetic poles; and an assembly consisting of a spherical, metal shadow mask with uniform holes and a metalized, tri-color, phosphor dot screen.

The tri-color, phosphor-dot screen is composed of an orderly array of small, closely spaced, phosphor dots arranged in triangular groups. Each group consists of a green-emitting dot, a red-emitting dot, and a blue-emitting dot, and is aligned with a corresponding hole in the shadow mask.

The 21AXP22A features an internal neck coating having high resistance which eliminates the need for an external resistor between the anode power supply and the tube to protect the tube against damage by a momentary internal arc. The resistance of the neck coating permits use of a tube insulating boot having an external conductive coating which with the metal envelope of the tube forms a supplementary filter capacitor.

CHARACTERISTICS

GENERAL DATA

Focusing Method	Electrostatic
Deflecting Method	Magnetic
Converging Method	Magnetic
Deflecting Angles (approx.)	
Horizontal	70 Degrees
Vertical	55 Degrees
Phosphor, Blue-Green-Red Dots	P22
Persistence	Medium
Arrangement	Triangular groups each consisting of blue dot, green dot and red dot.
Spacing Between Centers of Adjacent Dot Trios (approx.)	0.029 Inches
Faceplate, Spherical	Filter Glass
Light Transmittance (approx.)	77 Percent
Screen	Aluminized, Tri-color, Phosphor-dot Type

ELECTRICAL DATA

Heater Voltage	6.3 Volts
Heater Current (approx.)	1.8 ± 10% Amperes
Direct Interelectrode Capacitances (approx.)	
Grid No. 1 of any Gun to All Other Electrodes Except the No. 1 Grids of other Two Guns	7 μμf
Cathode of Blue Gun + Cathode of Green Gun + Cathode of Red Gun to All Other Electrodes	16 μμf
Grid No. 3 (of Each Gun Tied Within Tube to No. 3 Grids of Other Two Guns) to All Other Electrodes	9 μμf

QUICK REFERENCE DATA

Color Television Picture Tube
21" Direct Viewed
Round Metal Type
Spherical Faceplate
Filter Glass
Electrostatic Focus
Magnetic Convergence
Magnetic Deflection
Three Electron-Gun Type

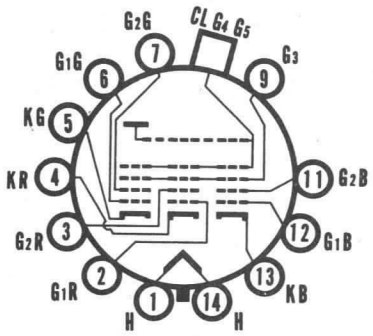

14-W

21AXP22

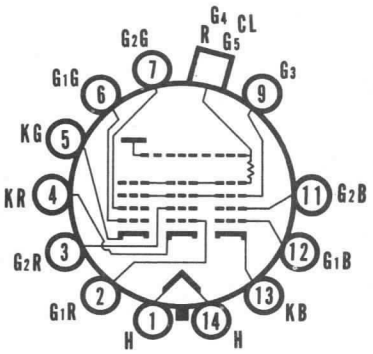

14-AH

21AXP22A

SYLVANIA ELECTRIC PRODUCTS INC.

TELEVISION PICTURE TUBE DIVISION

SENECA FALLS, NEW YORK

Prepared and Released By The
TECHNICAL PUBLICATIONS SECTION
EMPORIUM, PENNSYLVANIA

AUGUST, 1957

MECHANICAL DATA

Minimum Useful Screen Dimensions	19 1/16 x 15 1/4 Inches
Projected Screen Area	255 Sq. Inches
Anode[1] Terminal	Metal Shell Lip
Base (Small Shell Neodiheptal 12-Pin)	B12-131
Basing	
21AXP22	14W
21AXP22A	14AH
Mounting Position (base pin 12 on top)	Blue Gun Up
Weight (approx.)	28 Pounds
Tube Dimensions	
Maximum Overall Length	25 5/16 Inches
Diameter	
At Lip	20 9/16 ± 1/8 Inches
At Flange (Max.)	20 15/16 ± 5/16 Inches

RATINGS

Unless otherwise specified, voltage values are positive with respect to cathode of specified gun

MAXIMUM RATINGS (Absolute Maximum Values)

Anode[1]-to-Cathode (Of Each Gun) Voltage	27,500 Volts	Max.
Anode[1] Current (Average Each Gun)[2]	500 μa	Max.
Grid No. 3-to-Cathode (Of Each Gun) Voltage	6600 Volts	Max.
Grid No. 2-to-Cathode Voltage (Each Gun)	880 Volts	Max.
Grid No. 1-to-Cathode Voltage (Each Gun)		
Negative Bias Value	440 Volts	Max.
Positive Bias Value	0 Volts	Max.
Positive Peak Value	2 Volts	Max.
Peak Heater-Cathode Voltage (Each Gun)		
Heater Negative with Respect to Cathode		
During Warm-up Period not to Exceed 15 Seconds	450 Volts	Max.
After Equipment Warm-up Period	200 Volts	Max.
Heater Positive with Respect to Cathode	200 Volts	Max.

EQUIPMENT DESIGN RANGES (For Anode Voltage E_{c4k} (Each Gun) between 20,000[3] and 25,000 Volts)

Grid No. 3 (Focusing Electrode)-to-Cathode (Of Each Gun) Voltage	15.2% to 21.2 % of E_{c4k} Each Gun Volts
Grid No. 2-to-Cathode Voltage (Each Gun)	
When circuit design utilizes Grid No. 1-to Cathode Voltage (E_{c1k}) At Fixed Value for Raster Cutoff	See Chart
Grid No. 1-to-Cathode Voltage (Each Gun)	
For Visual Extinction of Focused Raster when Circuit Design Utilizes Grid No. 2-to-Cathode Voltage (E_{c2k}) At Fixed Value	See Chart
Variation in Raster Cutoff Between Guns	
In Any Tube	±21% of average of highest and lowest cutoff values
Maximum Grid No. 3 Current for Anode Current of 800 μa	75 μa
Grid No. 2 Current (Each Gun)	−5 to +5 μa
Percentage of Total Anode Current Supplied by	
Each Gun to Produce Illuminant-C White:	
Red Gun	47 to 67 Percent
Blue Gun	11 to 24 Percent
Green Gun	20 to 33 Percent
Each Gun to Produce White of 8500° K:	
Red Gun	42 to 60 Percent
Blue Gun	12 to 27 Percent
Green Gun	23 to 38 Percent

EQUIPMENT DESIGN RANGES (Continued)

Maximum Raster Shift in Any Direction from Screen Center[4]

Maximum Compensation to be Provided by the following Components:

- Purifying Magnet . . . . . Raster shift of 1 Inch in any direction from screen center
- Magnetic-Field Equalizer . . . . . Beam displacement with respect to phosphor dot at edge of screen
  - Tangential . . . . . ±0.0005 to ±0.007 Inches
  - Radial . . . . . ±0.0005 to ±0.005 Inches

Lateral-Converging Magnet:[5 & 6]
After adjustment has been made for color purity and dynamic convergence

Max. shift of blue beam . . . . . ±¼ Inch

Max. shift of red and green beams . . . . . ±⅛ to ±⅜ Inch

Average of Max. shift of red and green beams . . . . . ±7/32 to ±9/32 Inch

Radial-Converging Magnet Assembly:[5]
For static convergence after adjustment has been made for optimum color purity and dynamic convergence (Each Beam) . . . . . Shift of ±⅝ Inch

For dynamic convergence[7]
Effected by mmf of approximately parabolic and/or sawtooth waveshape synchronized with scanning

- Horizontal:
  - Blue Pattern
    - Parabola Amplitude to provide[8] . . . . . Shift of ¼ to 9/16 Inch
    - Sawtooth Amplitude to provide[9] . . Shift of ±50% of the shift caused by Parabola Amplitude
  - Red pattern and green pattern
    - Parabola:
      - Amplitude to provide[8] . . . . . Shift of ⅛ to ⅜ Inch
      - Ratio of red-pattern shift to green-pattern shift . . . . . ½ to 2
    - Sawtooth:
      - Amplitude for red-pattern to provide[9] . . . Shift of −35% to +85% of the shift caused by Parabola Amplitude.
      - Amplitude for green-pattern to provide[9] . . Shift of −85% to +35% of the shift caused by Parabola Amplitude.
      - Difference between red-pattern shift and green-pattern shift ($Shift_R$ — $Shift_G$) . . . . . 0 to +100 Percent
- Vertical:
  - Blue pattern
    - Parabola:
      - Amplitude to provide[8] . . . . . Shift of 0 to ⅛ Inch
    - Sawtooth:
      - Amplitude to provide[9] . . . . . Shift of 0 to ¼ Inch
  - Red pattern and green pattern
    - Parabola:
      - Amplitude to provide[8] . . . . . Shift of ⅛ to ⅜ Inch
      - Ratio of red-pattern shift to green-pattern shift . . . . . ½ to 2
    - Sawtooth:
      - Amplitude to provide[9] . . . . . Shift of −⅛ to +⅜
      - Difference between red-pattern shift and green-pattern shift ($Shift_R$—$Shift_G$) . . . . . 0 to +100 Percent

EXAMPLES OF USE DESIGN RANGES (For Anode Voltage of 25,000 VOLTS)

Grid No. 3 (Focusing Electrode)-to-Cathode
(Of Each Gun) Voltage . . . . . 3800 to 5300 Volts
Grid No. 2-to-Cathode Voltage (Each Gun)
When Circuit Design Utilizes Grid No. 1-to-Cathode
Voltage of −70 Volts for Raster Cutoff . . . . . 130 to 370 Volts
Grid No. 1-to-Cathode Voltage (Each Gun)
For Visual Extinction of Focused Raster When
Circuit Design utilizes Grid No. 2-to-Cathode Voltage
of 200 Volts . . . . . −45 to −100 Volts

LIMITING CIRCUIT VALUES

High Voltage Circuits

In order to minimize the possibility of damage to the 21AXP22 caused by a momentary internal arc, it is recommended that the anode power supply and the Grid No. 3 power supply be of the limited-energy type with inherent regulation to limit the continuous short-circuit current to 50 milliamperes. In addition, to prevent cathode damage with resultant decrease in tube life, the effective resistance between the anode power supply output capacitor and the anode, and the effective resistance between Grid No. 3 power supply output capacitor and the Grid No. 3 electrode should be not less than 50000 ohms. These resistances should be capable of withstanding the maximum instantaneous currents and voltages in their respective circuits. It is to be noted that the effectiveness of the resistance between the anode power supply output capacitor and the anode may be impaired if capacitance in excess of 750 $\mu\mu f$ is introduced between the tube and ground by the mounting arrangement of the tube.

For the 21AXP22A, the need for an external resistor between the anode power supply and the tube is eliminated by the addition of an internal neck coating which has a high resistance.

In equipment utilizing a well-regulated anode power supply, the Grid No. 3 circuit resistance should be limited to 7.5 megohms.

Low Voltage Circuits

Grid No. 1 Circuit Resistance (Each Gun) . . . . . 1.5 Megohms Max.

When the cathode of each gun is not connected directly to the heater, the Grid No. 2-to-heater circuit, the Grid No. 1-to-heater circuit, and the cathode-to-heater circuit should each have an impedance such that their respective power sources in combination will not supply an instantaneous or continuous short-circuit current of more than 300 milliamperes total. Such current limitation will prevent heater burnout in case of a momentary internal arc within the tube.

When the cathode is connected directly to the heater, the Grid No. 2-to-heater circuit, and the Grid No. 1-to-heater circuit should each have an impedance such that their respective power sources in combination will not supply an instantaneous or continuous short-circuit current of more than 300 milliamperes total. Such current limitation will prevent heater burnout in case of a momentary internal arc within the tube.

NOTES:

1. *The anode in a cathode-ray tube is the electrode to which is applied the highest dc voltage for accelerating the electrons in the beam prior to its deflection. In this tube the anode function is performed by Grid No. 4. Since Grid No. 4, Grid No. 5, and collector are connected together within the tube, they are collectively referred to simply as anode for convenience in presenting data.*
2. *A value of average anode current higher than 500 microamperes per gun will increase picture brightness but may impair resolution and shorten cathode life.*
3. *Brilliance and definition decrease with decreasing anode voltage. In general, the anode voltage should not be less than 20,000 volts.*
4. *Centering of the raster on the screen is accomplished by passing direct current of the required value through each pair of deflecting coils to compensate for raster shift resulting from adjustments for optimum convergence and color purity.*
5. *Shift is the movement of the regions of bar-or-dot generator pattern indicated in Notes 8 and 9.*
6. *The direction of movement of the red and green beam is opposite to that of the blue beam.*
7. *Indicated values apply when test yoke is used with 21AXP22A.*
8. *The parabola amplitude is determined by the average value of the shifts at the extremities of the respective horizontal and vertical axes of the screen with convergence of the three beams maintained at the center of the screen. An increase in amplitude should move the blue beam toward the top of the screen; and the red beam toward the lower left of the screen; and the green beam toward the lower right of the screen.*
9. *The sawtooth amplitude is determined by the difference between the shifts at the extremities of the respective horizontal and vertical axes of the screen. Positive amplitude indicates that the shift at the right or bottom of the screen is greater than the shift at the left or top of the screen.*

GENERAL CONSIDERATIONS

The absolute-maximum ratings in the tabulated data are limiting values beyond which the serviceability of the tube may be impaired from the viewpoint of life and satisfactory performance. The equipment designer must establish the circuit design so that initially and throughout tube and equipment life, no absolute-maximum value is exceeded under the worst probable operating conditions with respect to supply voltage variation, equipment component variation, equipment control adjustment, load variation, signal variation, environmental conditions, and variation in tube characteristics.

X-RAY WARNING. X-ray radiation is produced by the tube when it is operated at its normal anode voltage. The radiation is through the faceplate and is sufficient to require the adoption of safety measures. Simple shielding, such as that provided by a ¼-inch thickness of safety glass (lime), in front of the faceplate, should prove adequate to provide protection against personal injury from prolonged exposure at close range when the tube is operated at its maximum anode voltage rating.

When this tube is being serviced outside of the TV receiver cabinet, it should never be operated without providing adequate X-ray shielding in front of the faceplate. Because the anode voltage may rise above its maximum rated value for short periods during adjustment with increase in the amount of X-ray radiation, provision should be made for placing a ⅜ inch thickness of safety glass in front of the faceplate to avoid the hazard of X-ray radiation.

HIGH VOLTAGES. The high voltage at which cathode-ray tubes are operated may be very dangerous. Great care should be taken in the design of apparatus to prevent the operator from coming in contact with the high voltages. Precautions include the enclosing of high-potential terminals and the use of interlocking switches to break the primary circuit of the power supply when access to the equipment is required.

METAL SHELL. The metal shell of the tube operates at high voltage. After power is turned off, the metal shell should be grounded before it is touched.

CORONA CONSIDERATIONS. Adequate spacing between the lip of the metal shell and any grounded element in the receiver, or between the small end of the metal shell and any grounded element, should be provided to preclude the possibility of corona. Similarly, adequate air spacing, or equivalent, should be provided around the body of the metal shell.

ANODE CONNECTION. Anode connection may be made to any part of the metal envelope. A spring-type contact may be incorporated on the inside of the tube insulating boot or contact may be made to the metal-shell lip. With either method, adequate insulation and freedom from corona discharge must be provided in the design of the contact and its associated lead wire. The decorative paint on the metal envelope will not prevent a good electrical connection from being made provided the contact is under pressure.

INSULATING MATERIAL FOR EXTERNAL MASK. The external mask should be made only of insulating material. This material should provide insulation for the full applied anode voltage. Mask material providing the specified insulation can bear directly against the faceplate.

SHATTER-PROOF COVER OVER THE TUBE FACE. Following conventional practice, it is recommended that the cabinet be provided with a shatter-proof, clear glass cover over the face of the tube to protect it from being struck accidentally and to protect against possible damage resulting from tube implosion under some abnormal condition. This safety cover can also provide the necessary X-ray protection recommended under X-RAY WARNING.

TUBE HANDLING. Care should be taken to prevent bumping or striking of lip of the tube. Rough treatment may damage the faceplate seal.

Always handle the tube by the shell. Do not handle the tube by the neck or that part having the insulating coating. Finger prints or dust on the insulating coating may cause electrical breakdown during humid weather.

DEFLECTING YOKE. It is recommended that the deflecting yoke be insulated from the neck and funnel of the tube by an insulating liner. The liner should be made of material of such thickness that the yoke will be held back from the funnel no more than 3/32 inch when located in its most forward position. The liner should be capable of providing insulation for approximately one-half the maximum applied anode voltage.

In supporting the yoke, provision should be made to allow it to move freely along the neck for a distance of ⅝ inch from its most forward position.

MAGNETIC-FIELD EQUALIZER ASSEMBLY. Use of adjustable magnets located peripherally at the front end of the tube provides sectionalized magnetic fields to eliminate the need for a magnetic shield over the body of the tube and to permit compensation in localized areas for the effects of stray magnetic fields and of the earth's magnetic field on color purity.

DEGAUSSING PROCEDURE.—For the 21AXP22 and 21AXP22A. After the tube and components are in place, and before voltages are applied to the receiver, a degaussing coil, consisting of about 425 turns of No. 20 enameled wire wound 12 inches in diameter and connected directly to a 115 V ac outlet, should be passed in front of the tube faceplate several times. It should be slowly withdrawn to a distance of about six feet and then turned on its axis 90 degrees before the current is turned off. For optimum performance, the above procedure must be repeated every time the tube or receiver is moved.

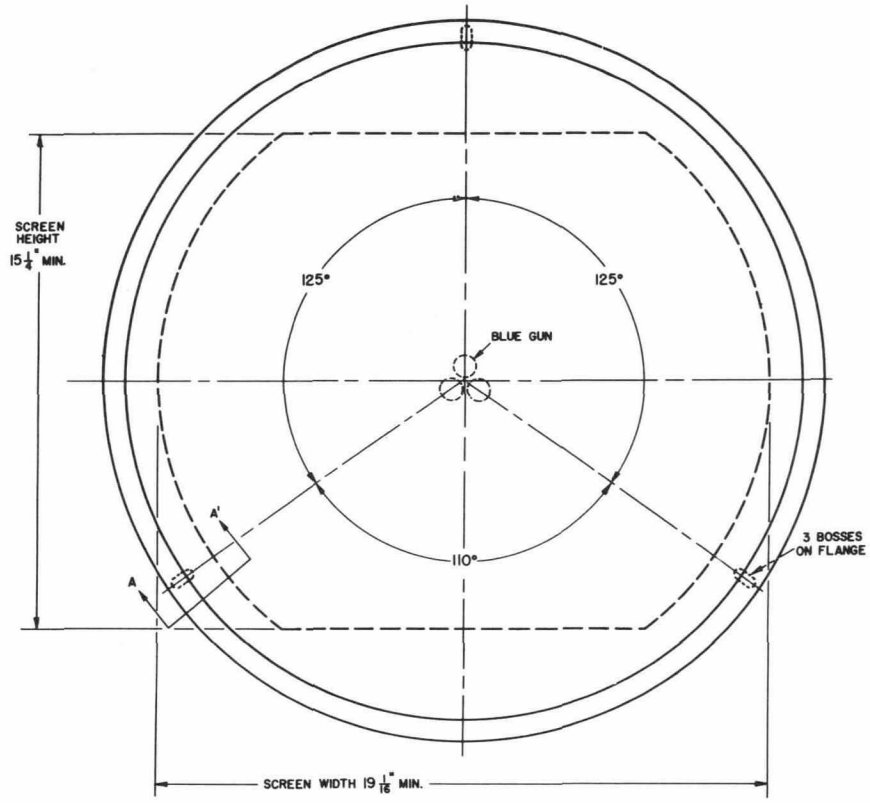

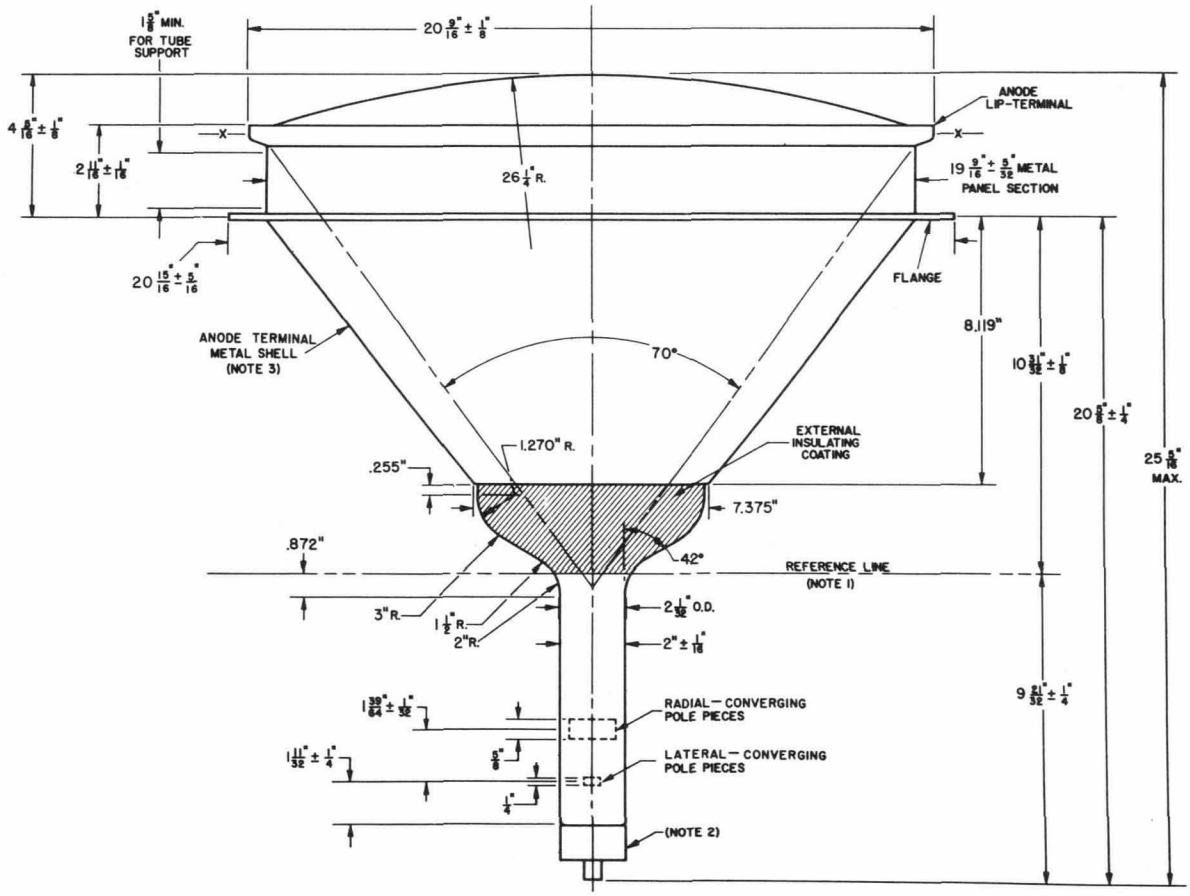

DIAGRAM NOTES:

1. *With tube neck inserted through flared end of reference-line and neck-funnel-contour gauge and with tube seated in gauge, the reference line is determined by the intersection of the plane C-C′ of the gauge with the glass funnel.*
2. *Socket for this base should not be rigidly mounted; it should have flexible leads and be allowed to move freely. Bottom circumference of base shell will fall within a circle concentric with metal-shell axis and having a diameter of 3 inches.*
3. *Metal shell and glass face operate at high voltage. Any material in contact with the shell or face must be insulated to withstand the maximum applied anode voltage.*

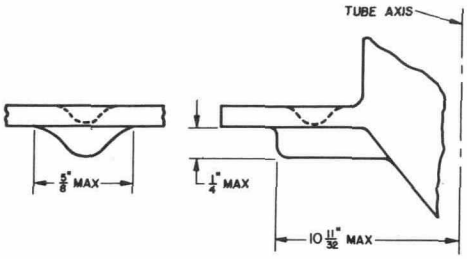

EXTERNAL VIEW AT A-A'
DETAIL OF FLANGE BOSSES

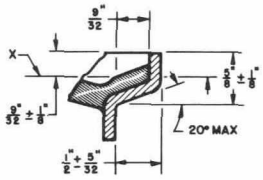

DETAIL OF LIP

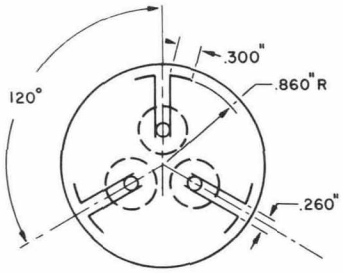

LOCATION OF RADIAL
CONVERGING POLE PIECES

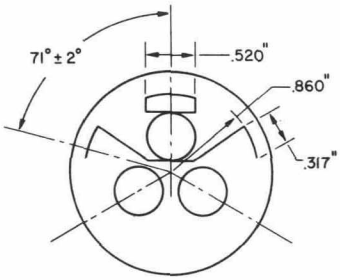

LOCATION OF LATERAL
CONVERGING POLE PIECES

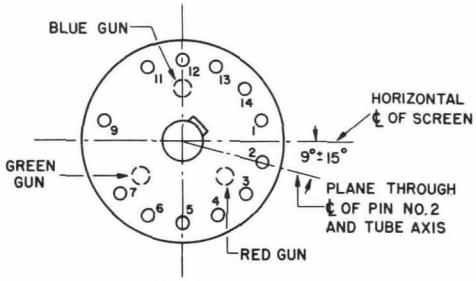

BASE
BOTTOM VIEW

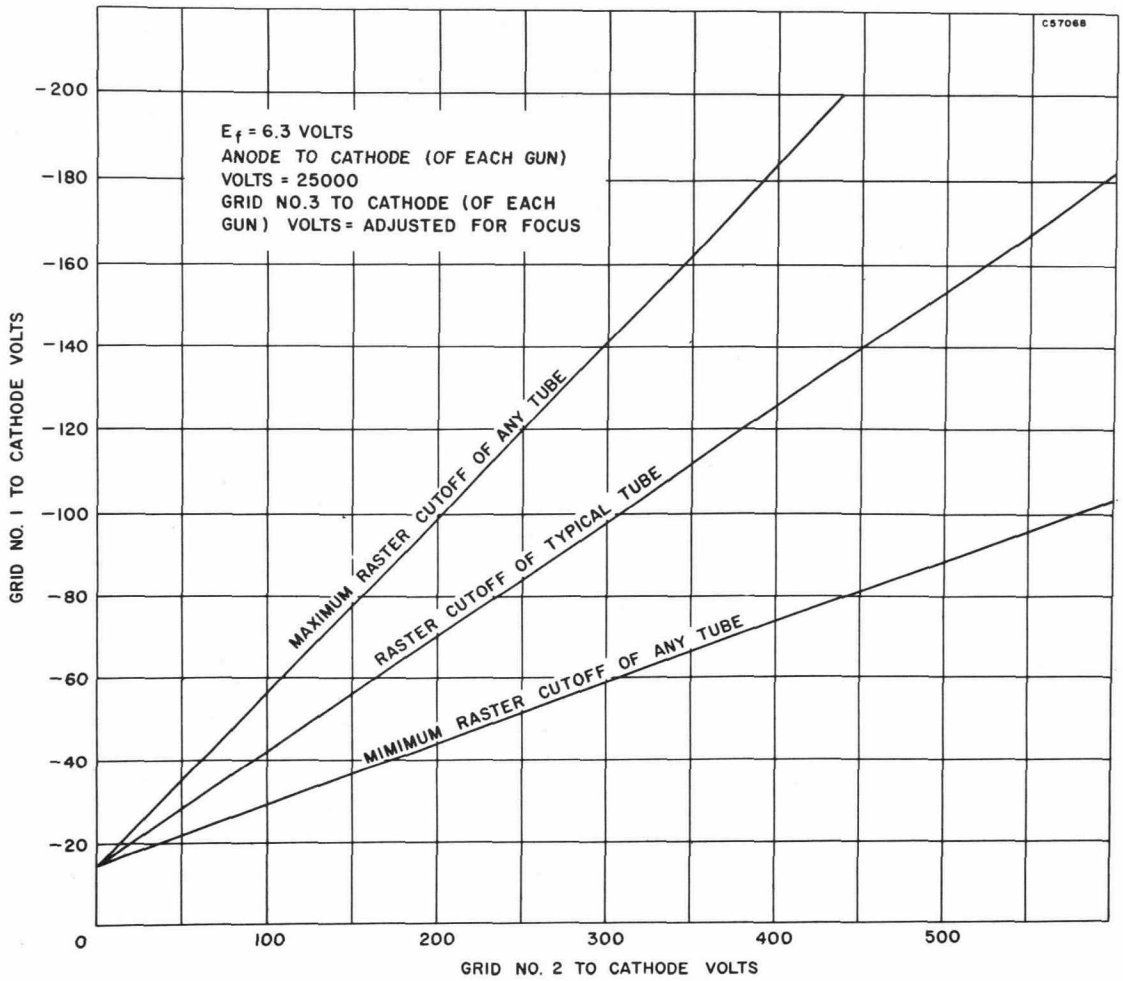

REFERENCE-LINE AND NECK-FUNNEL-CONTOUR GAUGE

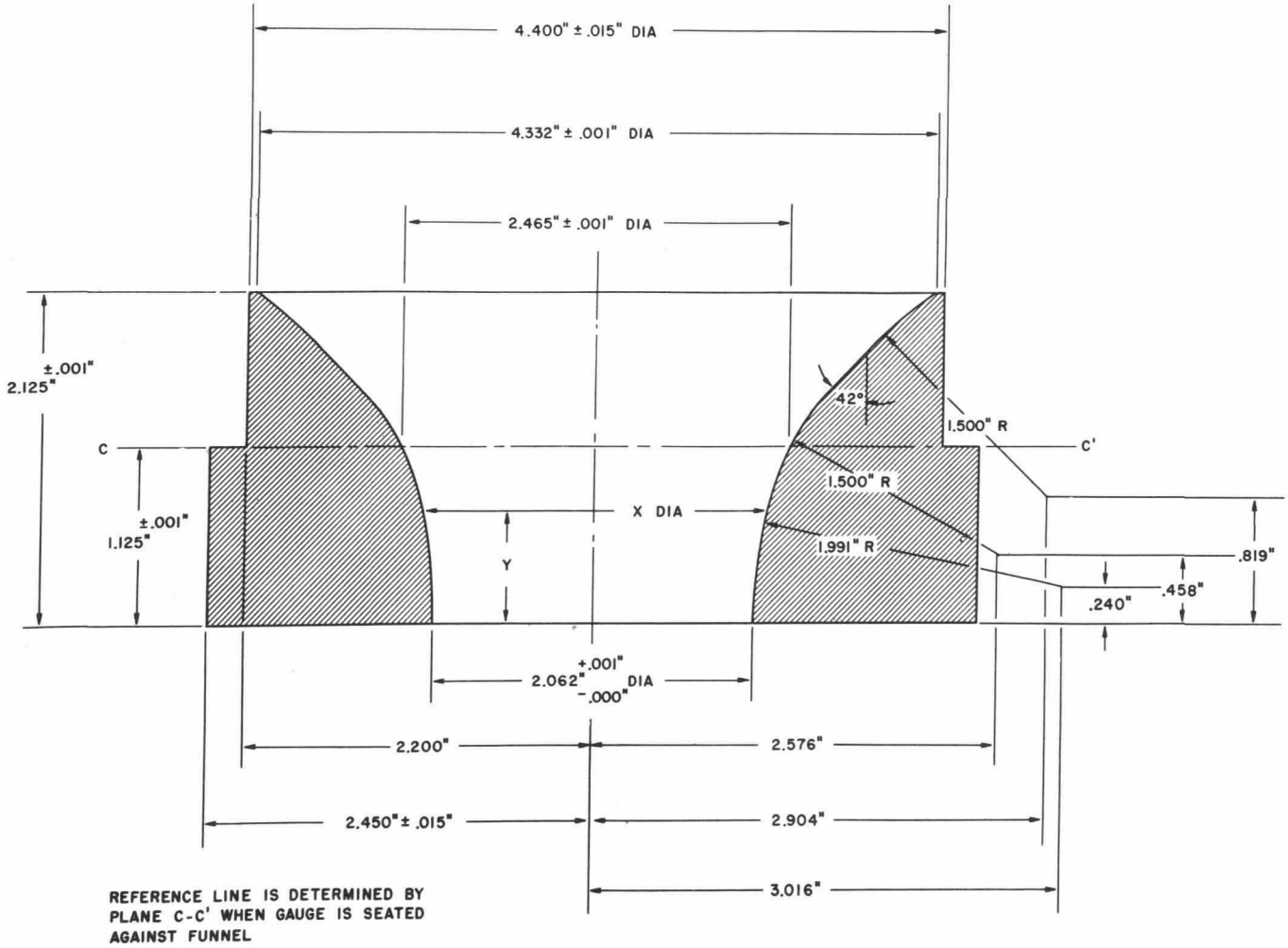

Y	X
0.000″	2.062″ $^{+\,0.001''}_{-\,0.000''}$
0.125″	2.062″ $^{+\,0.001''}_{-\,0.000''}$
0.250″	2.062″ $^{+\,0.001''}_{-\,0.000''}$
0.375″	2.062″ $^{+\,0.001''}_{-\,0.000''}$
0.385″	2.062″ $^{+\,0.001''}_{-\,0.000''}$
0.500″	2.084″ ± 0.001″
0.625″	2.122″ ± 0.001″
0.750″	2.182″ ± 0.001″
0.875″	2.258″ ± 0.001″
1.000″	2.352″ ± 0.001″

Y	X
1.125″	2.465″ ± 0.001″
1.250″	2.604″ ± 0.001″
1.375″	2.778″ ± 0.001″
1.500″	2.990″ ± 0.001″
1.625″	3.216″ ± 0.001″
1.750″	3.440″ ± 0.001″
1.875″	3.678″ ± 0.001″
2.000″	3.958″ ± 0.001″
2.125″	4.332″ ± 0.001″