21AXP22-A
COLOR KINESCOPE

THREE-GUN SHADOW-MASK TYPE — ELECTROSTATIC FOCUS
MAGNETIC CONVERGENCE — MAGNETIC DEFLECTION
ALUMINIZED TRICOLOR PHOSPHOR-DOT SCREEN
Supersedes Type 21AXP22

DATA

General:

Electron Guns, Three with Axes Tilted Toward Tube Axis . . . . . Blue, Green, Red
Heater, for Unipotential Cathode of Each Gun, Paralleled with Each of the Other Two Heaters within Tube:
Voltage. . . . . 6.3 . . . . . ac or dc volts
Current. . . . . 1.8 ± 10% . . . . . .amp
Direct Interelectrode Capacitances (Approx.):
Grid No.1 of any gun to all other electrodes except the No.1 grids of the other two guns. . . . . 7 μμf
Cathode of blue gun + cathode of green gun + cathode of red gun to all other electrodes . . . . . 16 μμf
Grid No.3 (Of each gun tied within tube to No.3 grids of other two guns) to all other electrodes. . . . . 9 μμf
Faceplate, Spherical . . . . . .Filterglass
Light transmission (Approx.) 77%
Screen, on Inner Surface of Faceplate:
Type . . . . . Aluminized, Tricolor, Phosphor-Dot
Phosphor (Three separate phosphors, collectively). P22
Fluorescence and phosphorescence of separate phosphors, respectively. . . Blue, Green, Red
Persistence of group phosphorescence . . . . . Medium
Dot arrangement. . . . . Triangular group consisting of blue dot, green dot, and red dot
Spacing between centers of adjacent dot trios (Approx.) 0.029"
Size (Minimum):
Greatest width . . . . . 19-1/16"
Height . . . . . 15-1/4"
Projected area . . . . . 255 sq. in.
Focusing Method. . . . . .Electrostatic
Convergence Method . . . . . Magnetic
Deflection Method. . . . . Magnetic
Deflection Angles (Approx.):
Horizontal . . . . . 70°
Vertical . . . . . 55°
Tube Dimensions:
Maximum overall length . . . . . 25-5/16"
Diameter:
At lip . . . . . 20-9/16" ± 1/8"
At flange. . . . . 20-15/16" ± 5/16"
Weight (Approx.) . . . . . 28 lbs
Mounting Position. . . . . Tube axis horizontal (base pin 12 on top)

TUBE DIVISION
RADIO CORPORATION OF AMERICA, HARRISON, NEW JERSEY

21AXP22-A

COLOR KINESCOPE

Ultor Terminal. . . . . Metal Shell
Base. . . . Small-Shell Neodiheptal 12-Pin (JETEC No.B12-131)
Socket. . . . . Alden Nos.214NMINSC (Radial leads), 214NMINC (Axial leads), or equivalent
Basing Designation for BOTTOM VIEW. 14AH

Pin 1 - Heater
Pin 2 - Grid No.1 of Red Gun
Pin 3 - Grid No.2 of Red Gun
Pin 4 - Cathode of Red Gun
Pin 5 - Cathode of Green Gun
Pin 6 - Grid No.1 of Green Gun
Pin 7 - Grid No.2 of Green Gun

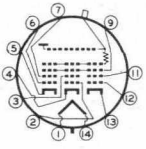

Pin 9 - Grids No.3
Pin 11 - Grid No.2 of Blue Gun
Pin 12 - Grid No.1 of Blue Gun
Pin 13 - Cathode of Blue Gun
Pin 14 - Heater
METAL SHELL: Ultor (Grid No.4, Grid No.5, Collector)

Maximum Ratings, *Design-Center Values:*

ULTOR-TO-CATHODE (Of each gun) VOLTAGE. . .	25000 max.	volts
ULTOR CURRENT, (Average, each gun).	500* max.	μamp
GRID-No.3-TO-CATHODE (Of each gun) VOLTAGE .	6000 max.	volts
GRID-No.2-TO-CATHODE VOLTAGE (Each gun) . .	800 max.	volts
GRID-No.1-TO-CATHODE VOLTAGE (Each gun):		
Negative bias value	400 max.	volts
Positive bias value	0 max.	volts
Positive peak value	2 max.	volts
PEAK HEATER-CATHODE VOLTAGE (Each gun):		
Heater negative with respect to cathode:		
During equipment warm-up period not exceeding 15 seconds.	410 max.	volts
After equipment warm-up period.	180 max.	volts
Heater positive with respect to cathode .	180 max.	volts

Equipment Design Ranges:

With any ultor voltage (E_{c_4k} each gun) between 20000# and 25000 volts

Grid-No.3 (Focusing electrode)-to-Cathode (Of each gun) Voltage .	15.2% to 21.2% of E_{c_4k} each gun	volts
Grid-No.2-to-Cathode Voltage (Each gun) when circuit design utilizes grid-No.1-to-cathode voltage (E_{c_1k}) at fixed value for raster cutoff.	*See Cutoff Design Chart*	

*,#: See next page.

TUBE DIVISION
RADIO CORPORATION OF AMERICA, HARRISON, NEW JERSEY

21AXP22-A
COLOR KINESCOPE

Grid-No.1-to-Cathode Voltage (Each gun) for Visual Extinction of Focused Raster when circuit design utilizes grid-No.2-to-cathode voltage (E_{c_2k}) at fixed value.	*See Cutoff Design Chart*	
Variation in Raster Cutoff Between Guns in Any Tube.	± 21% of average of highest and lowest cutoff values	
Grid-No.3 Current for ultor current of 800 μamp.	-45 to +75	μamp
Grid-No.2 Current (Each gun) . . .	-5 to +5	μamp
Percentage of Total Ultor Current Supplied by Each Gun:		
To produce Illuminant-C White (I.C.I. Coordinates x = 0.310, y = 0.316):		
Red gun.	47 to 67	per cent
Blue gun	11 to 24	per cent
Green gun.	20 to 33	per cent
To produce White of 8500°K + 27 M.P.C.D. (I.C.I. Coordinates x = 0.287, y = 0.316):		
Red gun.	42 to 60	per cent
Blue gun	12 to 27	per cent
Green gun.	23 to 38	per cent
Maximum Raster Shift in Any Direction from Screen Center□. .	1	inch
Adjustment to be Provided by the Following Components:		
Purifying magnet	Raster shift of 1" max. in any direction from screen center	
Magnetic-field equalizer	Beam displacement with respect to phosphor dot at position of max. displacement (i.e., edge of screen)	
Tangential	±0.0005" to ±0.007"	
Radial	±0.0005" to ±0.005"	

* A value of average ultor current per gun higher than 500 microamperes will increase picture brightness but may impair resolution and shorten cathode life.

□ Centering of the raster on the screen is accomplished by passing direct current of the required value through each pair of deflecting coils to compensate for raster shift resulting from adjustments for optimum convergence and color purity.

Brilliance and definition decrease with decreasing ultor voltage. In general, the ultor voltage should not be less than 20000 volts.

TUBE DIVISION
RADIO CORPORATION OF AMERICA, HARRISON, NEW JERSEY

21AXP22-A
COLOR KINESCOPE

Lateral-Converging Magnet:⊕♦	
After adjustment has been made for color purity and dynamic convergence--	
Max. shift of blue beam.	±1/4"
Max. shift of red and green beams.	±1/8" to ±3/8"
Average of max. shift of red and green beams	±7/32" to ±9/32"
Radial-Converging Magnet Assembly:⊕	
For static convergence--	
After adjustment has been made for optimum color purity and dynamic convergence (Each beam).	Shift of ±5/8"
For dynamic convergence†--	
Effected by magnetomotive force of parabolic and/or saw-tooth waveshape synchronized with scanning.	
Horizontal:	
Blue pattern--	
Parabola amplitude to provide▲.	Shift of 1/4" to 9/16"
Sawtooth amplitude to provide○○	Shift of ±50% of the shift caused by parabola amplitude
Red pattern & green pattern--	
Parabola:	
Amplitude to provide▲. . . .	Shift of 1/8" to 3/8"
Ratio of red-pattern shift to green-pattern shift.	1/2 to 2
Sawtooth:	
Amplitude for red pattern to provide○○	Shift of -35% to +85% of the shift caused by parabola amplitude
Amplitude for green pattern to provide○○	Shift of -85% to +35% of the shift caused by parabola amplitude
Difference between red-pattern shift and green-pattern shift ($Shift_R$ - $Shift_G$).	0 to +100%
Vertical:	
Blue pattern--	
Parabola amplitude to provide▲.	Shift of 0 to 1/8"

⊕,♦,†,▲,○○: See next page.

TUBE DIVISION
RADIO CORPORATION OF AMERICA, HARRISON, NEW JERSEY

21AXP22-A
COLOR KINESCOPE

For dynamic convergence† (Cont'd):

Vertical:

Sawtooth amplitude to provide○○ . . . . . Shift of 0 to 1/4"

Red pattern & green pattern—

Parabola:

Amplitude to provide▲. . . . Shift of 1/8" to 3/8"

Ratio of red-pattern shift to green-pattern shift . . . . . 1/2 to 2

Sawtooth:

Amplitude to provide○○ . . Shift of -1/8" to +3/16"

Difference between red-pattern shift and green-pattern shift ($Shift_R$ - $Shift_G$) . . . . . 0 to +100%

Examples of Use of Design Ranges:

For ultor voltage of	*20000*	*25000*	*volts*
Grid-No.3 (Focusing Electrode)-to-Cathode (Of Each Gun) Voltage.	3040 to 4240	3800 to 5300	volts
Grid-No.2-to-Cathode Voltage (Each Gun) when circuit design utilizes grid-No.1-to-cathode voltage of -70 volts for raster cutoff.	130 to 370	130 to 370	volts
Grid-No.1-to-Cathode Voltage (Each Gun) for Visual Extinction of Focused Raster when circuit design utilizes grid-No.2-to-cathode voltage of 200 volts	-45 to -100	-45 to -100	volts

Limiting Circuit Values:

High-Voltage Circuits:

In order to minimize the possibility of damage to the tube caused by a momentary internal arc, it is recommended that the *ultor power supply* and the *grid-No.3 power supply* be of the limited-energy type with inherent regulation to limit the continuous short-circuit current to 50 milliamperes. In addition, to prevent cathode damage with resultant decrease in tube life, the effective resistance between grid-No.3 power supply output capacitor and the grid-No.3 electrode should be not less than 50000 ohms. This resistance should be capable of withstanding the maximum instantaneous current and voltage in the grid-No.3 circuit.

In equipment utilizing a well-regulated ultor power supply, the *grid-No.3-circuit resistance* should be limited to 7.5 megohms.

⊕,♦,†,▲,○○: See next page.

TUBE DIVISION
RADIO CORPORATION OF AMERICA, HARRISON, NEW JERSEY

21AXP22-A
COLOR KINESCOPE

Low-Voltage Circuits:
Grid-No.1-Circuit Resistance
(Each Gun) . . . . 1.5 max. megohms

When the cathode of each gun is not connected directly to the heater, the grid-No.2-to-heater circuit, the grid-No.1-to-heater circuit, and the cathode-to-heater circuit should each have an impedance such that their respective power sources in combination will not supply an instantaneous or continuous short-circuit current of more than 300 milliamperes total. Such current limitation will prevent heater burnout in case of a momentary internal arc within the tube.

When the cathode is connected directly to the heater, the grid-No.2-to-heater circuit, and the grid-No.1-to-heater circuit should each have an impedance such that their respective power sources in combination will not supply an instantaneous or continuous short-circuit current of more than 300 milliamperes total. Such current limitation will prevent heater burnout in case of a momentary internal arc within the tube.

⊕ Shift is the movement of the regions of bar-or-dot-generator pattern indicated in notes (▲) and (oo).

● The direction of movement of the red and green beam is opposite to that of the blue beam.

† Indicated values apply when RCA test yoke is used with the 21AXP22-A.

▲ The parabola amplitude is determined by the average value of the shifts at the extremities of the respective horizontal and vertical axes of the screen with convergence of the three beams maintained at the center of the screen. An increase in amplitude should move the blue beam toward the top of the screen; the red beam toward the lower left of the screen; and the green beam toward the lower right of the screen.

oo The sawtooth amplitude is determined by the difference between the shifts at the extremities of the respective horizontal and vertical axes of the screen. Positive amplitude indicates that the shift at the right or bottom of the screen is greater than the shift at the left or top of the screen.

X-RAY WARNING

X-ray radiation is produced by the 21AXP22-A when it is operated at its normal ultor voltage. The radiation is through the faceplate, and is sufficient to require the adoption of safety measures in TV receivers. Shielding such as that provided by a 1/4-inch thickness of safety glass (lime) in front of the faceplate, should prove adequate to provide protection against personal injury from prolonged exposure at close range when the tube is operated at its maximum ultor voltage rating.

When this tube is being serviced outside of the TV receiver cabinet, it should never be operated without providing adequate X-ray shielding in front of faceplate. Because the ultor voltage may rise above its maximum rated value for short periods during adjustment with increase in the amount of X-ray radiation, provision should be made for placing a 3/8-inch thickness of safety glass in front of the faceplate to avoid the hazard of X-ray radiation.

TUBE DIVISION
RADIO CORPORATION OF AMERICA, HARRISON, NEW JERSEY

21AXP22-A

CUTOFF DESIGN CHART

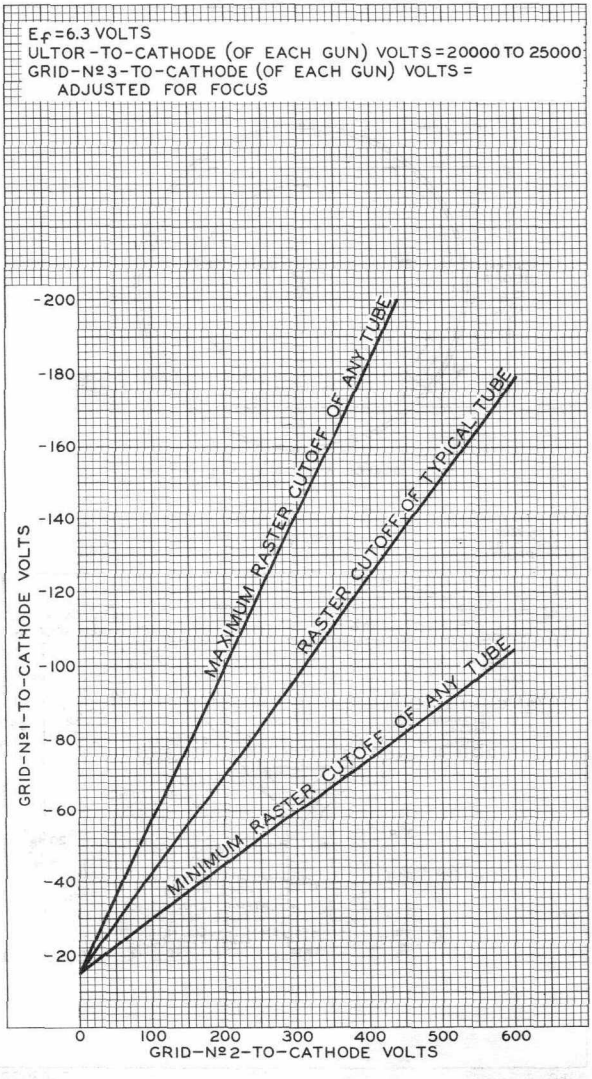

21AXP22-A

COLOR KINESCOPE

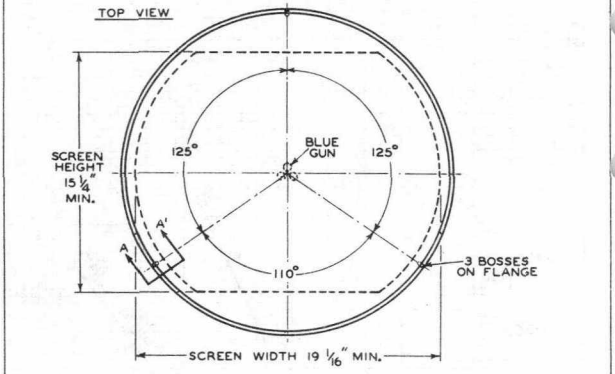

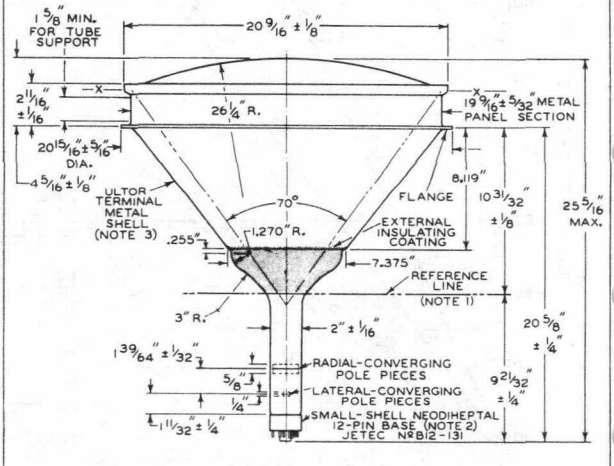

TUBE DIVISION
RADIO CORPORATION OF AMERICA, HARRISON, NEW JERSEY

21AXP22-A

COLOR KINESCOPE

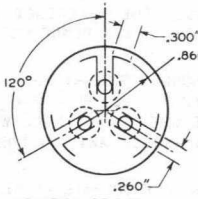

LOCATION OF RADIAL-CONVERGING POLE PIECES

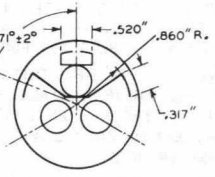

LOCATION OF LATERAL-CONVERGING POLE PIECES

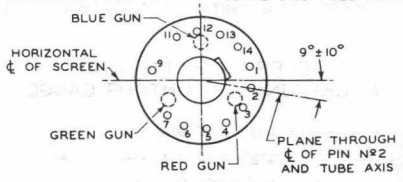

BASE
BOTTOM VIEW

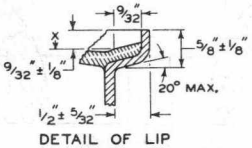

DETAIL OF LIP

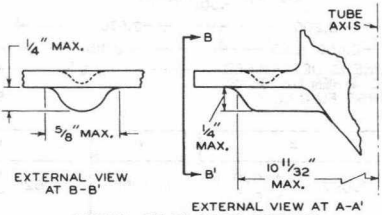

DETAIL OF FLANGE BOSSES

92CL-8399R4

TUBE DIVISION
RADIO CORPORATION OF AMERICA, HARRISON, NEW JERSEY

21AXP22-A

COLOR KINESCOPE

NOTE 1: WITH TUBE NECK INSERTED THROUGH FLARED END OF REFERENCE-LINE AND NECK-FUNNEL-CONTOUR GAUGE (SHOWN BELOW) AND WITH TUBE SEATED IN GAUGE, THE REFERENCE LINE IS DETERMINED BY THE INTERSECTION OF THE PLANE CC' OF THE GAUGE WITH THE GLASS FUNNEL.

NOTE 2: SOCKET FOR THIS BASE SHOULD NOT BE RIGIDLY MOUNTED; IT SHOULD HAVE FLEXIBLE LEADS AND BE ALLOWED TO MOVE FREELY. BOTTOM CIRCUMFERENCE OF BASE SHELL WILL FALL WITHIN A CIRCLE CONCENTRIC WITH METAL-SHELL AXIS AND HAVING A DIAMETER OF 3".

NOTE 3: METAL SHELL AND GLASS FACE OPERATE AT HIGH VOLTAGE. ANY MATERIAL IN CONTACT WITH THE SHELL OR THE FACE MUST BE INSULATED TO WITHSTAND THE MAXIMUM APPLIED ULTOR VOLTAGE.

REFERENCE-LINE AND NECK-FUNNEL-CONTOUR GAUGE

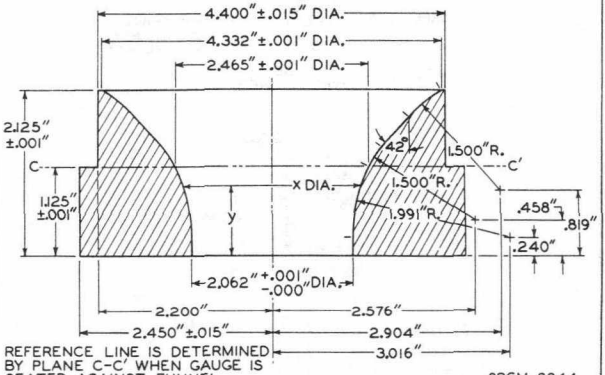

y	x		y	x	
0.000"	2.062"	+ 0.001" − 0.000"	0.385"	2.062"	+ 0.001" − 0.000"
0.125"	2.062"	+ 0.001" − 0.000"	0.500"	2.084"	± 0.001"
0.250"	2.062"	+ 0.001" − 0.000"	0.625"	2.122"	± 0.001"
0.375"	2.062"	+ 0.001" − 0.000"	0.750"	2.182"	± 0.001"

TUBE DIVISION
RADIO CORPORATION OF AMERICA, HARRISON, NEW JERSEY

21AXP22-A

COLOR KINESCOPE

y	x
0.875"	2.258" ± 0.001"
1.000"	2.352" ± 0.001"
1.125"	2.465" ± 0.001"
1.250"	2.604" ± 0.001"
1.375"	2.778" ± 0.001"
1.500"	2.990" ± 0.001"

y	x
1.625"	3.216" ± 0.001"
1.750"	3.440" ± 0.001"
1.875"	3.678" ± 0.001"
2.000"	3.958" ± 0.001"
2.125"	4.332" ± 0.001"

TUBE DIVISION
RADIO CORPORATION OF AMERICA, HARRISON, NEW JERSEY

21AXP22-A

21AXP22-A

TYPICAL DRIVE CHARACTERISTICS

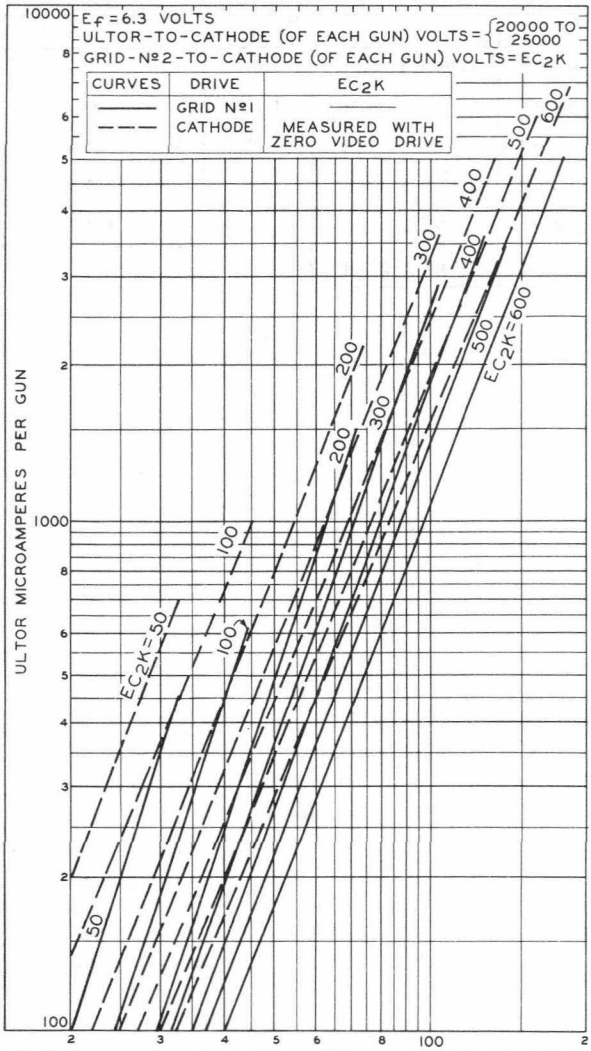

TUBE DIVISION

RADIO CORPORATION OF AMERICA, HARRISON, NEW JERSEY

92CM-8566R1

21AXP22-A

TYPICAL LIGHT-OUTPUT CHARACTERISTICS

E_f = 6.3 VOLTS

GRID-No.3-TO-CATHODE (OF EACH GUN) VOLTS = ADJUSTED FOR FOCUS

DRIVE OF EACH GUN IS ADJUSTED TO GIVE COMPOSITE ULTOR CURRENT TO PRODUCE 8500°K + 27 M.P.C.D. WHITE LIGHT OUTPUT

PERCENTAGE OF TOTAL ULTOR CURRENT SUPPLIED BY EACH GUN TO PRODUCE 8500°K +27 M.P.C.D. WHITE:

RED GUN: 51%
BLUE GUN: 19%
GREEN GUN: 30%

RASTER SIZE: 19 1/16" x 14 1/2"

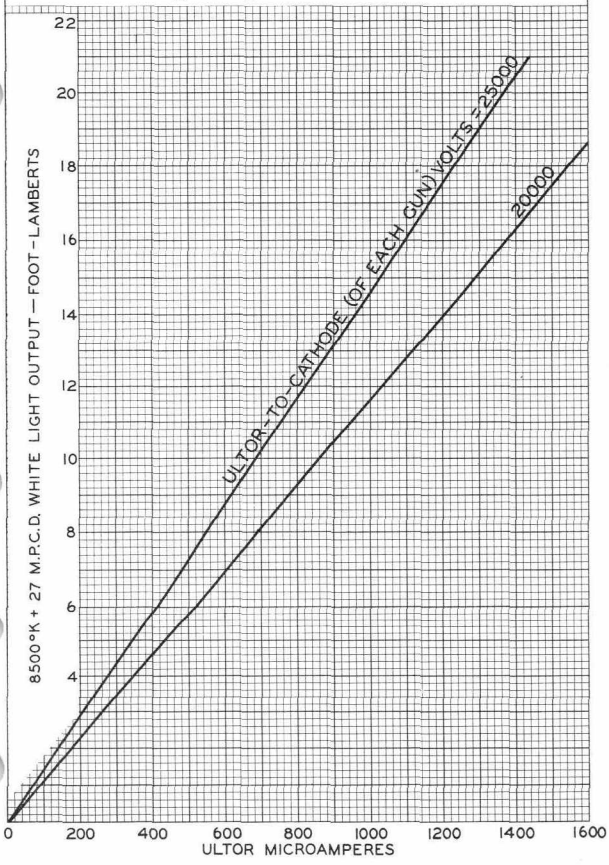

21AXP22-A/21AXP22
COLOR PICTURE TUBE

THREE-GUN SHADOW-MASK TYPE — ELECTROSTATIC FOCUS
MAGNETIC CONVERGENCE — MAGNETIC DEFLECTION
ALUMINIZED TRICOLOR PHOSPHOR-DOT SCREEN
Replacement for Types 21AXP22 & 21AXP22-A

DATA

General:

Electron Guns, Three with Axes Tilted
  Toward Tube Axis. . . . . .Red, Blue, Green
Heater, for Unipotential Cathode of
  Each Gun, Paralleled with Each of
  the Other Two Heaters within Tube:
  Voltage . . . . . 6.3 . . . . . .ac or dc volts
  Current . . . . . 1.8 ± 10% . . . . . amp
Faceplate, Spherical. . . . . Filterglass
  Light transmission (Approx.). 77%
Screen, On Inner Surface of Faceplate:
  Type. . . . . .Aluminized, Tricolor, Phosphor-Dot
  Phosphor (Three separate phosphors, collectively)♦. . . P22
    Fluorescence and phosphorescence of
      separate phosphors, respectively. . . .Red, Blue, Green
    Persistence of group phosphorescence. . . . . .Medium
  Dot arrangement . . . . . .Triangular group consisting of
                red dot, blue dot, and green dot
  Spacing between centers of adjacent dot trios (Approx.) 0.029"
  Size (Minimum):
    Greatest width. . . . . 19-1/16"
    Height. . . . . 15-1/4"
    Projected area. . . . . 255 sq. in.
Focusing Method . . . . . Electrostatic
Convergence Method. . . . . .Magnetic
Deflection Method . . . . . .Magnetic
Deflection Angles (Approx.):
  Horizontal. . . . . 70°
  Vertical. . . . . 55°
Tube Dimensions:
  Maximum overall length. . . . . 25-5/16"
  Diameter:
    At lip. . . . . 20-9/16" ± 1/8"
    At flange . . . . . 20-15/16" ± 5/16"
Weight (Approx.). . . . . 28 lbs
Operating Position. . . . . .Tube axis horizontal
                (Base pin 12 on top)
Ultor Terminal. . . . . Metal Shell
Socket. . . . . Alden Nos.214NMINSC (Radial leads),
                214NMINC (Axial leads), or equivalent

♦ For Curves, see front of this Section.

21AXP22-A/21AXP22
COLOR PICTURE TUBE

Base. . . . Small-Shell Neodiheptal 12-Pin (JEDEC No.B12-131)
Basing Designation for BOTTOM VIEW. 14W

Pin 1 - Heater
Pin 2 - Grid No.1 of Red Gun
Pin 3 - Grid No.2 of Red Gun
Pin 4 - Cathode of Red Gun
Pin 5 - Cathode of Green Gun
Pin 6 - Grid No.1 of Green Gun
Pin 7 - Grid No.2 of Green Gun

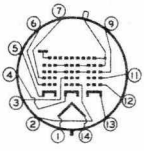

Pin 9 - Grids No.3
Pin 11 - Grid No.2 of Blue Gun
Pin 12 - Grid No.1 of Blue Gun
Pin 13 - Cathode of Blue Gun
Pin 14 - Heater
METAL SHELL - Ultor (Grid No.4, Grid No.5, Collector)

Maximum Ratings, *Design-Center Values:*

ULTOR-TO-CATHODE (Of each gun) VOLTAGE. . .	25000 max.	volts
GRID-No.3-TO-CATHODE (Of each gun) VOLTAGE.	6000 max.	volts
GRID-No.2-TO-CATHODE VOLTAGE (Each gun) . .	800 max.	volts
GRID-No.1-TO-CATHODE VOLTAGE (Each gun):		
Negative-bias value	400 max.	volts
Positive-bias value	0 max.	volts
Positive-peak value	2 max.	volts
PEAK HEATER-CATHODE VOLTAGE (Each gun):		
Heater negative with respect to cathode:		
During equipment warm-up period not exceeding 15 seconds.	410 max.	volts
After equipment warm-up period.	180 max.	volts
Heater positive with respect to cathode .	180 max.	volts

Limiting Circuit Values:

High-Voltage Circuits:

In order to minimize the possibility of damage to the tube caused by a momentary internal arc, it is recommended that the *ultor power supply* and the *grid-No.3 power supply* be of the limited-energy type with inherent regulation to limit the continuous short-circuit current to 50 milliamperes. In addition, to prevent cathode damage with resultant decrease in tube life, the effective resistance between grid-No.3 power-supply output capacitor and the grid-No.3 electrode should be not less than 50,000 ohms. This resistance should be capable of withstanding the maximum instantaneous current and voltage in the grid-No.3 circuit.

In equipment utilizing a well-regulated ultor power supply, the *grid-No.3-circuit resistance* should be limited to 7.5 megohms.

Low-Voltage Circuits:

Grid-No.1-Circuit Resistance (Each gun) . . 1.5 max. megohms

21AXP22-A/21AXP22
COLOR PICTURE TUBE

When the cathode of each gun is not connected directly to the heater, the grid-No.2-to-heater circuit, the grid-No.1-to-heater circuit, and the cathode-to-heater circuit should each have an impedance such that their respective power sources in combination will not supply an instantaneous or continuous short-circuit current of more than 300 milliamperes total. Such current limitation will prevent heater burnout in case of a momentary internal arc within the tube.

When the cathode is connected directly to the heater, the grid-No.2-to-heater circuit, and the grid-No.1-to-heater circuit should each have an impedance such that their respective power sources in combination will not supply an instantaneous or continuous short-circuit current of more than 300 milliamperes total. Such current limitation will prevent heater burnout in case of a momentary internal arc within the tube.

X-RAY WARNING

X-ray radiation is produced by the 21AXP22-A/21AXP22 when it is operated at its normal ultor voltage. The radiation is through the faceplate, and is sufficient to require the adoption of safety measures in television receivers. Shielding such as that provided by a 1/4-inch thickness of safety glass (lime) in front of the faceplate, should prove adequate to provide protection against personal injury from prolonged exposure at close range when the tube is operated at its maximum ultor-voltage rating.

When this tube is being serviced outside of the television receiver cabinet, it should never be operated without providing adequate X-ray shielding in front of faceplate. Because the ultor voltage may rise above its maximum rated value for short periods during adjustment with increase in the amount of X-ray radiation, provision should be made for placing a 3/8-inch thickness of safety glass in front of the faceplate to avoid the hazard of X-ray radiation.