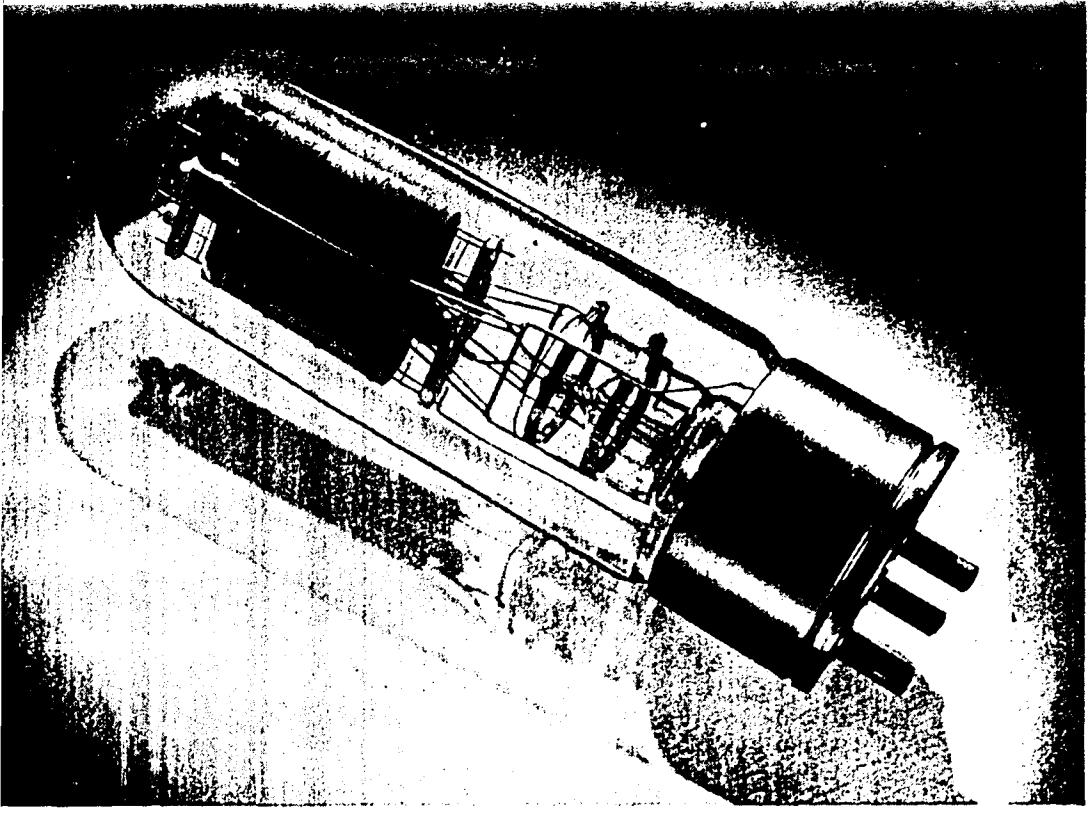

MACHLETT

ML-212E

DESCRIPTION AND RATINGS

DESCRIPTION

The ML-212E is a three-electrode tube designed for use as a modulator, amplifier, or oscillator in radio-transmitting service. The cathode is a thoriated-tungsten filament. The tube is convection cooled, the anode being capable of dissipating 275 watts. Maximum ratings of 3 kVdc and 350 milliamperes apply at frequencies up to 1.5 mc/sec; operation at 4.5 mc/sec is permissible with plate voltage reduced to 1 kVdc.

The ML-212E embodies all the techniques and skills that have been inherently a part of Machlett Laboratories, Inc., since 1897. All parts are thoroughly processed by special Machlett techniques, which prevent contamination and assure complete and permanent out-gassing. The tube is exhausted by a straight-line, high-voltage process assuring the same high standards as characterize the Machlett line of high- and super-voltage x-ray tubes.

GENERAL CHARACTERISTICS

Electrical	
Filament Voltage	14 volts
Filament Current at 14 volts	6 amperes
Amplification Factor	16
Grid-Plate Transconductance	8500 uMhos
Interelectrode Capacitances	
Grid-Plate	18.8 uuf
Grid-Filament	14.9 uuf
Plate-Filament	8.6 uuf
Mechanical	
Mounting Position	Vertical or Horizontal*
Type of Cooling	Convection
Base (Use with W.E. 113A socket, or equivalent)	Large 4-pin bayonet

*If mounted horizontally, the plane of the filament should be vertical.

MAXIMUM RATINGS

Direct Plate Voltage	3000 volts
Direct Plate Current	350 milliamperes
Plate Dissipation	275 watts
Direct Grid Current	75 milliamperes
R.F. Grid Current	5 amperes
Frequency	1.5 megacycles

The above are maximum ratings which do not apply simultaneously but depend on the type of service specified below.

TYPICAL OPERATING CONDITIONS

Class A Audio Amplifier or Modulator

Direct Plate Voltage	1500	1250	volts
Grid Bias	−57	−40	volts
Direct Plate Current	170	200	milliamperes
Plate Dissipation	250	250	watts
Load Impedance	5000	3000	ohms
Undistorted Output	50	40	watts

Grid Bias Modulator

Direct Plate Voltage	3000	volts
Grid Bias	−260	volts
Plate Dissipation	175	watts
Load Impedance	8000	ohms
Peak Power Output	200	watts

Class B Audio Amplifier or Modulator
(for balanced 2 tube circuit)

Direct Plate Voltage	2000	1500	volts
Grid Bias	−105	−75	volts
Direct Plate Current per tube			
No drive	40	50	milliamperes
Maximum drive	300	300	milliamperes
Plate Dissipation	250	250	watts
Load Resistance (plate-to-plate)	8000	5900	ohms
Load Resistance (per tube)	2000	1475	ohms
Approximate maximum output	650	500	watts
Recommended power for driving stage	50	50	watts

Class B Radio-Frequency Amplifier

Direct Plate Voltage	2000	1500	volts
Direct Plate Current	300	300	milliamperes
Plate Dissipation	275	275	watts
Grid Bias	−120	−90	volts
Approximate carrier watts for use with 100% modulation	200	150	watts

Class C Radio-Frequency Oscillator or Power Amplifier—Unmodulated

Direct Plate Voltage	2000	1500	volts
Direct Plate Current	300	300	milliamperes
Grid Bias	−185 to −250	−150 to −200	volts
Nominal Power Output	400	300	watts

Class C Radio-Frequency Amplifier—Plate Modulated

Direct Plate Voltage	1500	1000	volts
Direct Plate Current	300	300	milliamperes
Grid Bias	−200	−125	volts
Direct Grid Current	75	75	milliamperes
Nominal Carrier Power Output for use with 100% modulation	300	200	watts

APPLICATION NOTES

Maximum ratings apply at frequencies of 1.5 megacycles and less. The maximum plate voltage for the upper frequency limit of 4.5 megacycles is 1000 volts. The maximum plate voltage for frequencies between 1.5 and 4.5 megacycles should be proportionately reduced.

Each ML-212E vacuum tube falls within one of four impedance classes and is stamped accordingly. These classifications are #1, #2, #3 and #4, and are in no way a gradation of quality, but are to facilitate parallel operation in the ordinary system using a common grid battery. Where more than one tube is used, those of the same or adjacent classes should be employed so that the load may be evenly distributed. When only a single tube is used no one of the classes has any advantage over the other. Tubes may not be ordered according to impedance classification.

With a plate voltage of 1500 volts, a grid bias of −60 volts and a filament voltage of 14, the plate current will be as follows for each impedance class:

#1	110-129	milliamperes, inclusive
#2	130-148	" "
#3	149-167	" "
#4	168-185	" "

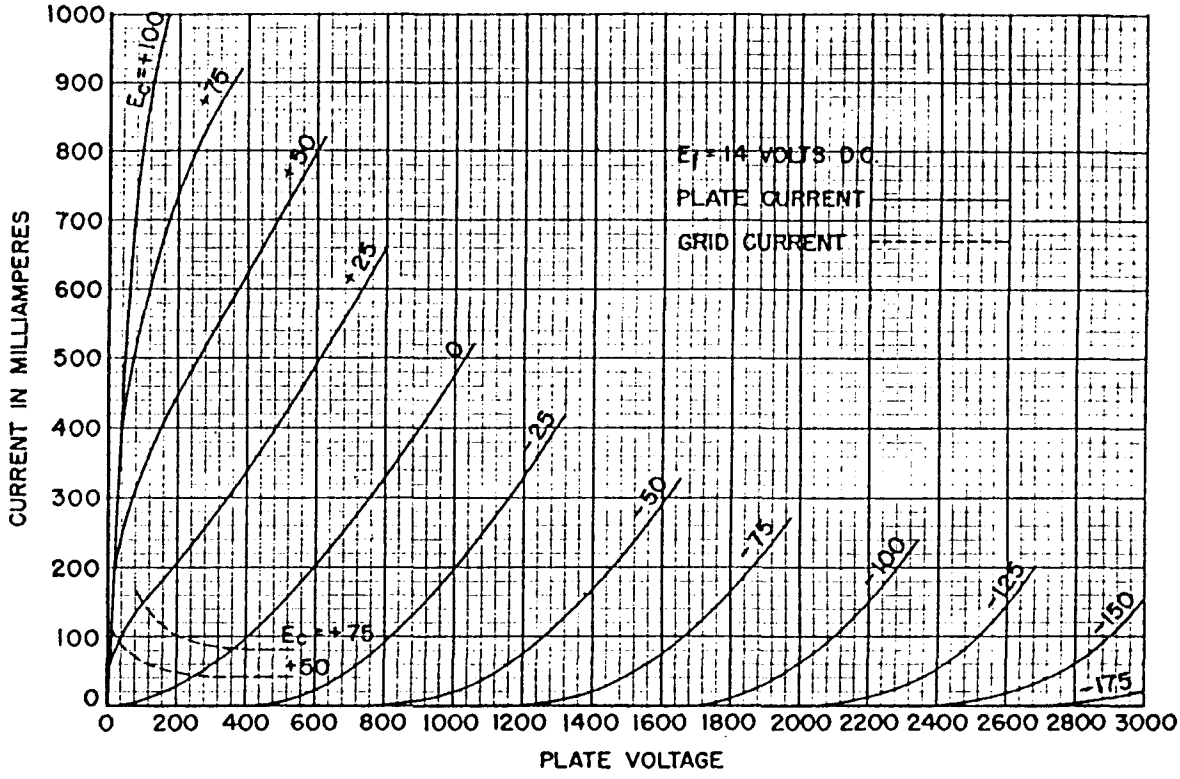
CURRENT IN MILLIAMPERES
PLATE VOLTAGE
E_f = 14 VOLTS D.C.
PLATE CURRENT
GRID CURRENT
E_c = +100
+75
+50
+25
0
-25
-50
-75
-100
-125
-150
-175
E_c = +75
+50

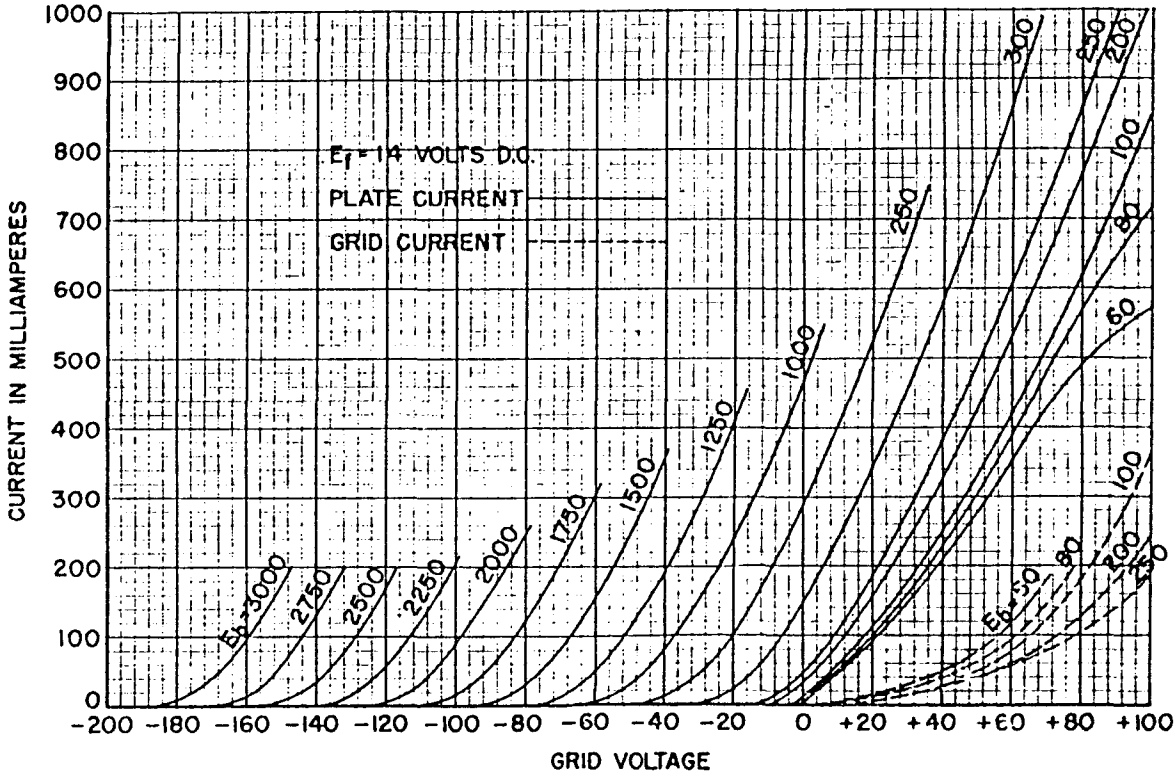
CURRENT IN MILLIAMPERES
GRID VOLTAGE
E_f = 14 VOLTS D.C.
PLATE CURRENT
GRID CURRENT
E_b = 3000
2750
2500
2250
2000
1750
1500
1250
1000
250
300
250
200
100
80
60
100
80
200
250
E_b = 50

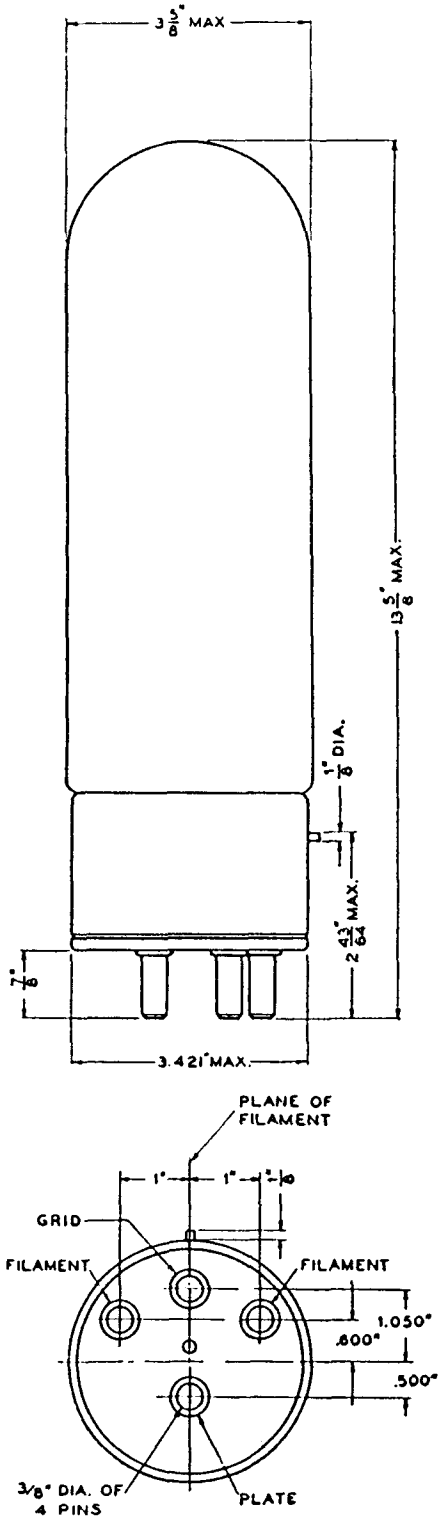

DIMENSIONS—ML-212E

MACHLETT LABORATORIES, INC.

SPRINGDALE MACHLETT CONNECTICUT

U. S. A.