RMA RELEASE NO. 341
July 7, 1943

sponsor: General Electric Co.

TECHNICAL INFORMATION

1P23

Gas-Filled Phototube
Number of Electrodes - 2

2K

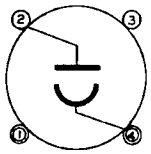

GENERAL CHARACTERISTICS

Electrical

Cathode Photo-Surface	S-1
Luminous Sensitivity at 90 Volts, 0 Cycles	50 Microamperes Per Lumen
Relative Luminous Sensitivity at 90 Volts, 10,000 Cycles	70 Per Cent
Interelectrode Capacitance	2.5 uuf
Leakage Resistance, Minimum	900 Megohms
Wavelength of Maximum Response	7500 A
Sensitivity at Maximum Response	60 Microamperes Per Microwatt

Mechanical

Window Dimensions	1 9/16 Inches X 11/16 Inches
Seated Height to Center of Useful Cathode Area	2 3/16 Inches
Maximum Overall Height	4 1/8 Inches
Maximum Seated Height	3 9/16 Inches
Maximum Diameter	1.165 Inches
Base	MB-074
Basing	2K
Mounting Position	Any
Net Weight Approximately	1 Ounce

MAXIMUM RATINGS

Anode Voltage (D-C or Peak A-C)	100 Volts
Anode Current Density	102 Microamperes Per Sq In.
Ambient Temperature	100 C

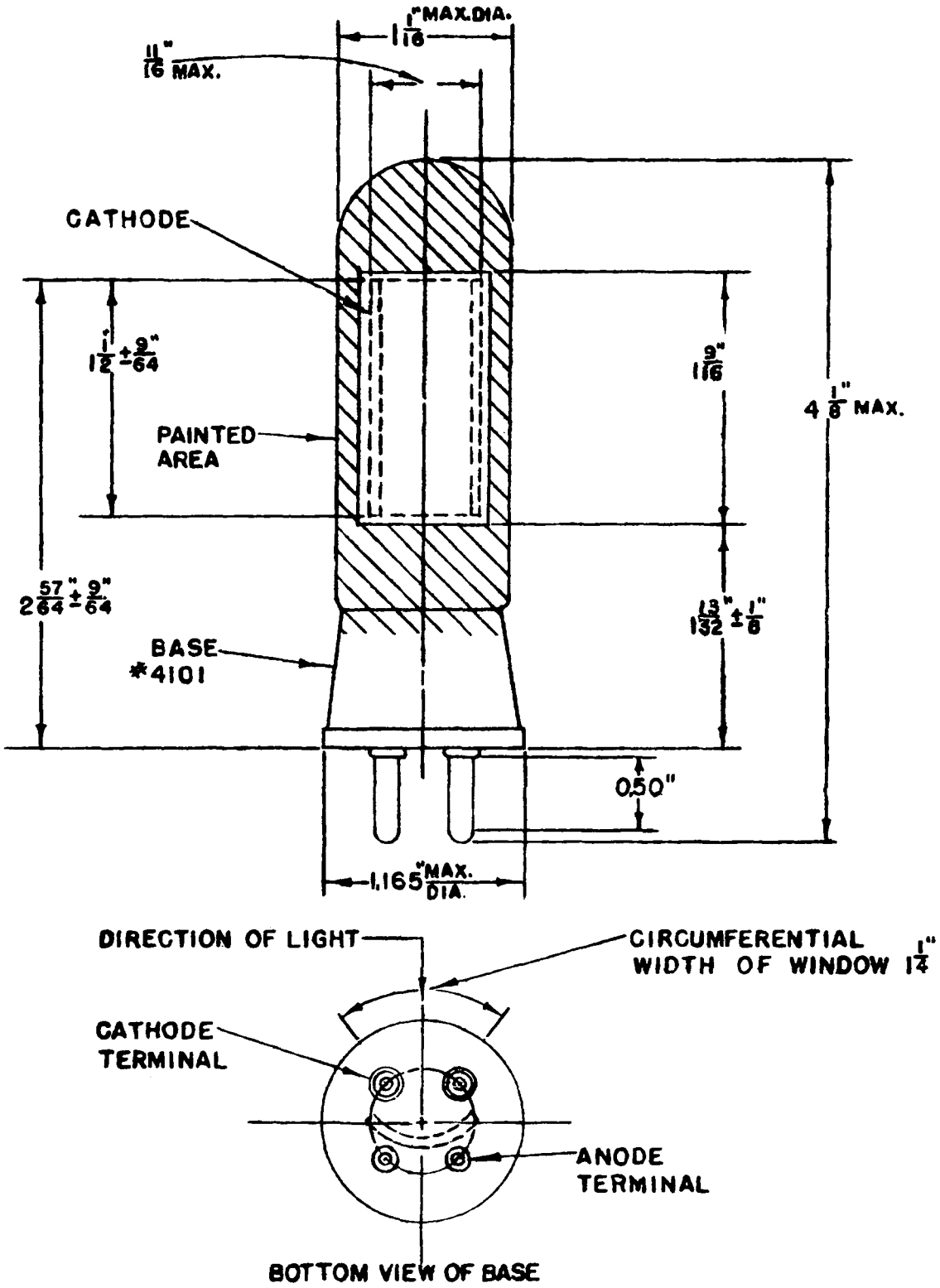

OUTLINE

IP23 PHOTOTUBE