VACUUM CAPACITORS

GL-1L21, GL-1L22, GL-1L23, GL-1L24, GL-1L25, GL-1L31, GL-1L32, GL-1L33, GL-1L36, and GL-1L38

These capacitors are designed for circuits where the peak voltages range up to 7500 and to 16,000 volts. They are useful as plate-tank and by-pass capacitors in radio-frequency oscillators or amplifiers and as neutralizing capacitors in radio-frequency amplifiers in conjunction with small, low-capacitance padding capacitors. In communication applications, vacuum capacitors are extensively used as antenna-coupling capacitors, especially in aviation radio installations where constant internal voltage breakdown is an essential requirement.

The small size and compact construction of these capacitors permit circuits to be designed more compactly and with shorter leads than with air capacitors. They are comparatively loss-free, since there are no losses in the vacuum dielectric and because the total capacitance is lumped into a size about one cubic inch. Other advantages include the elimination, because of the vacuum construction, of the adverse effects of dust and other foreign matter, and constant internal voltage breakdown which is independent of altitude, temperature, and humidity.

GENERAL ELECTRIC

Supersedes ETI-262–269, -307–308 and ETX-113–120, -227, -228

Electronic TUBE

TECHNICAL INFORMATION

Type No.	Capacitance ±5 Per Cent	Voltage Maximum Peak	Ambient Temperature		Weight	
			Minimum	Maximum	Net Ounces	Shipping Pounds
GL-1L32	6 uuf	7500 Volts	−40	+65 C	4	1
GL-1L31	6 uuf	16000 Volts	−40	+65 C	6	1
GL-1L21	12 uuf	7500 Volts	−40	+65 C	4	1
GL-1L25	12 uuf	16000 Volts	−40	+65 C	6	1
GL-1L36	25 uuf	7500 Volts	−40	+65 C	4	1
GL-1L22	25 uuf	16000 Volts	−40	+65 C	6	1
GL-1L38	50 uuf	7500 Volts	−40	+65 C	4	1
GL-1L23	50 uuf	16000 Volts	−40	+65 C	6	1
GL-1L33	100 uuf	7500 Volts	−40	+65 C	6	1
GL-1L24	100 uuf	16000 Volts	−40	+65 C	8	1

The curves on page 4 for the 7500-volt types and on page 5 for the 16,000-volt types show the maximum allowable peak r-f voltage and maximum RMS current when the capacitors are operated at various frequencies. An additional d-c voltage is permissible so long as the total voltage (d-c plus r-f) does not exceed the maximum allowable peak voltage indicated by the dotted line on the curve.

These curves apply when the capacitors are operated at an ambient temperature of 50 C and for normal operating conditions with natural air cooling.

The correction curve on page 3 indicates the percentage increase or decrease in r-f voltage and current when the capacitors are operated at ambient temperature above or below 50 C. (Note that the allowable peak voltage, r-f plus d-c, at any ambient temperature should not exceed the maximum as indicated by the dotted line of the curves on pages 4 and 5.)

The manner in which these curves are used can be demonstrated by taking the 1L21 as an example. Assume that the 1L21 is to be used at a frequency of 30 megacycles and at an ambient temperature of 40 C. The correction curve indicates a correction factor of 118 percent at this temperature; the curves on page 4 indicate a maximum r-f voltage of 4600 volts peak and a maximum current of 10 amperes at the frequency chosen. The correction factor of 118 percent applied to these voltage and current values indicates an allowable maximum peak r-f voltage of 5428 volts and a maximum current of 11.8 amperes.

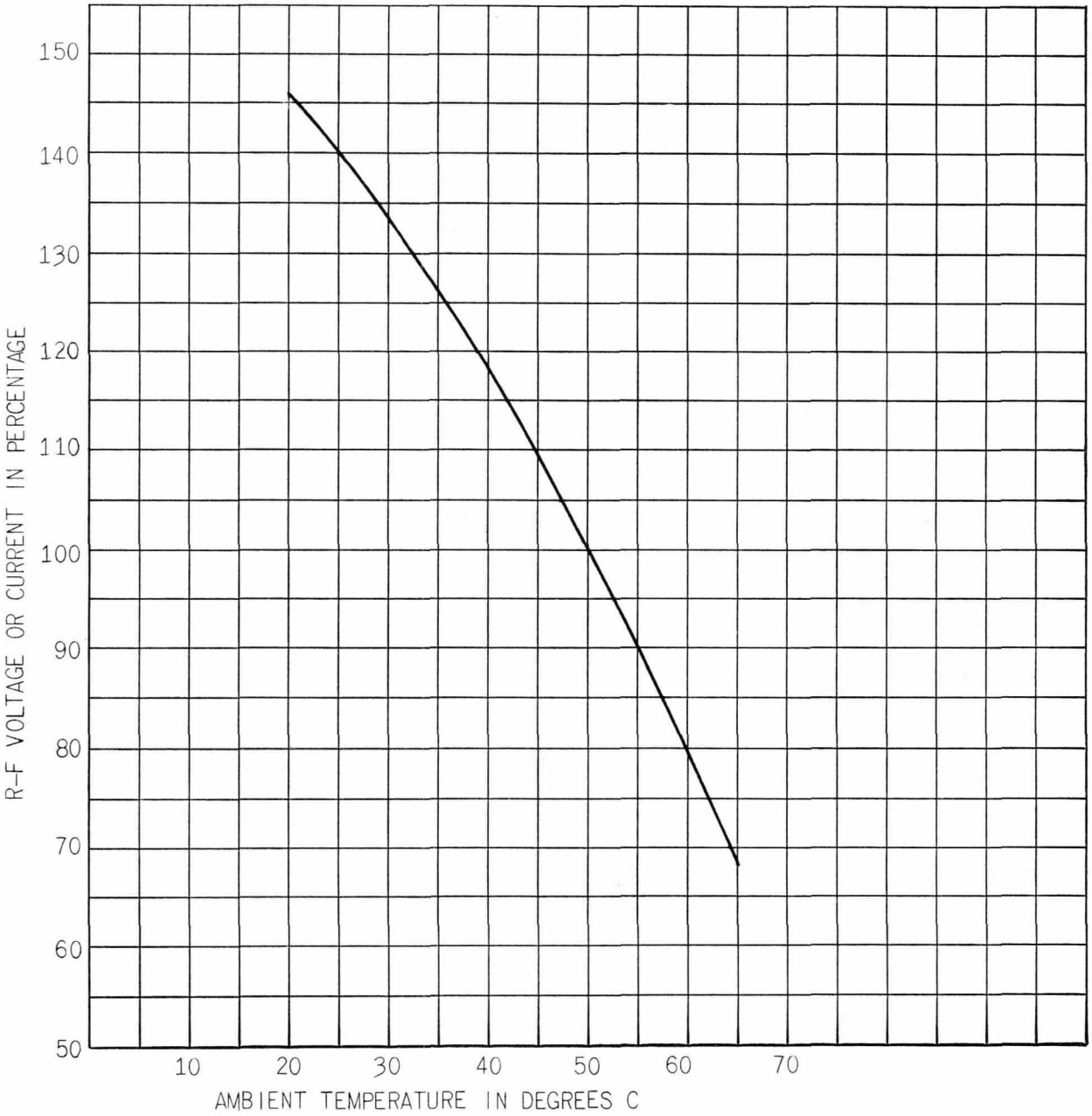

VACUUM CAPACITORS
CORRECTION CURVE—PERCENTAGE VOLTAGE OR CURRENT VS AMBIENT TEMPERATURE

K-69087-72A7

4-5-46

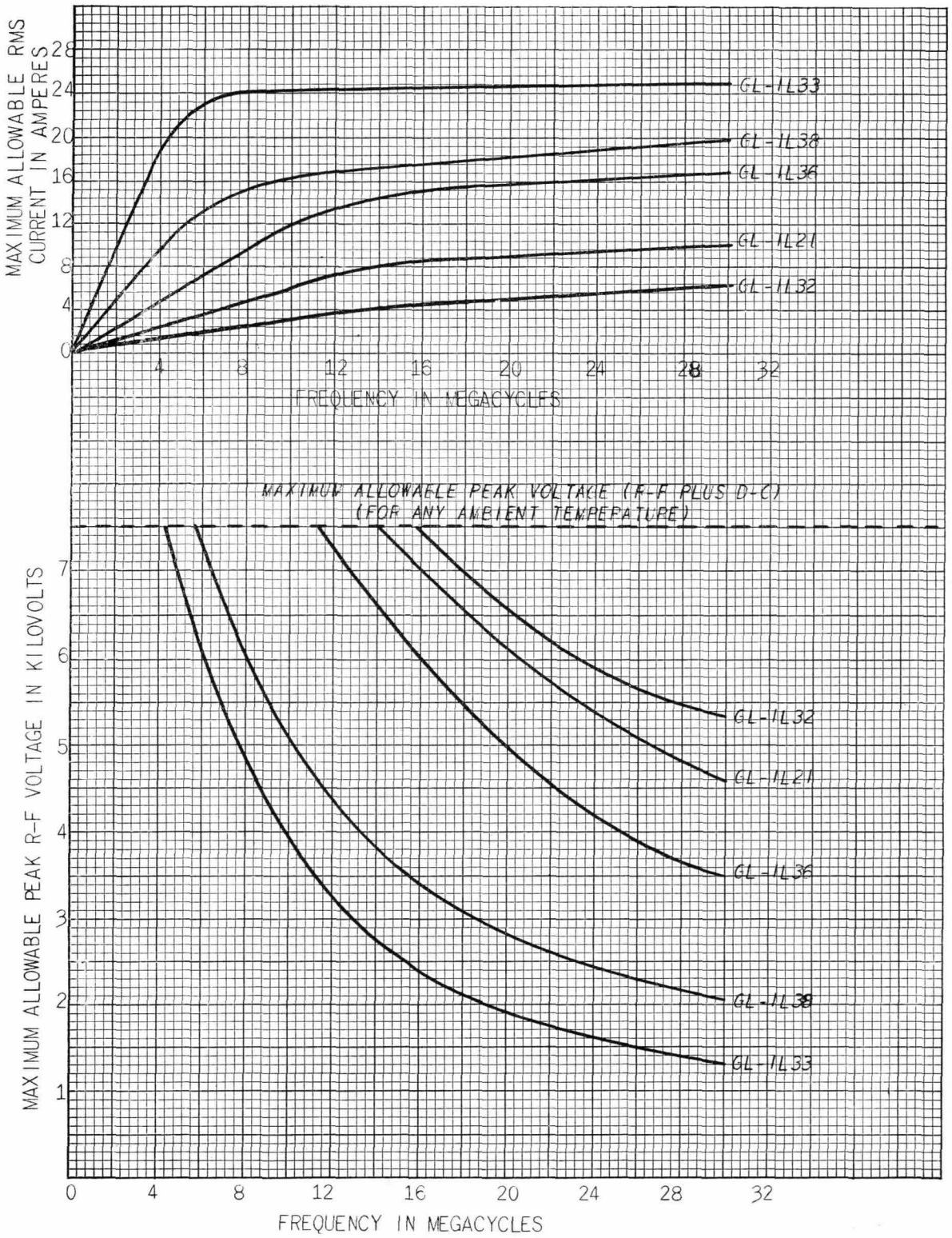

GL-1L21, -32, -33, -36, -38
VOLTAGE AND CURRENT VS FREQUENCY
(FOR OPERATION AT 50 C AMBIENT TEMPERATURE)

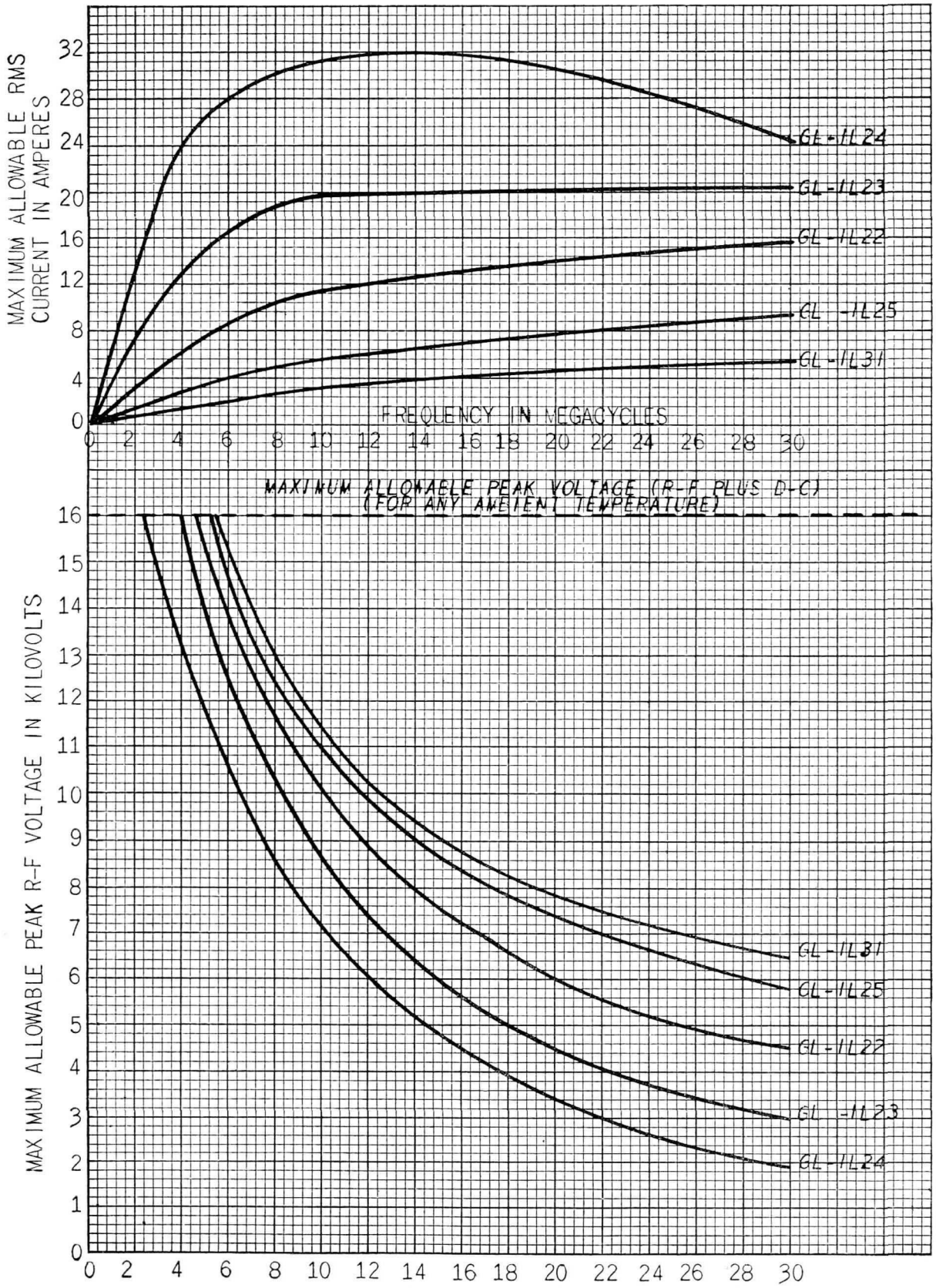

GL-1L22, -23, -24, -25, -31
VOLTAGE AND CURRENT VS FREQUENCY
(FOR OPERATION AT 50 C AMBIENT TEMPERATURE)

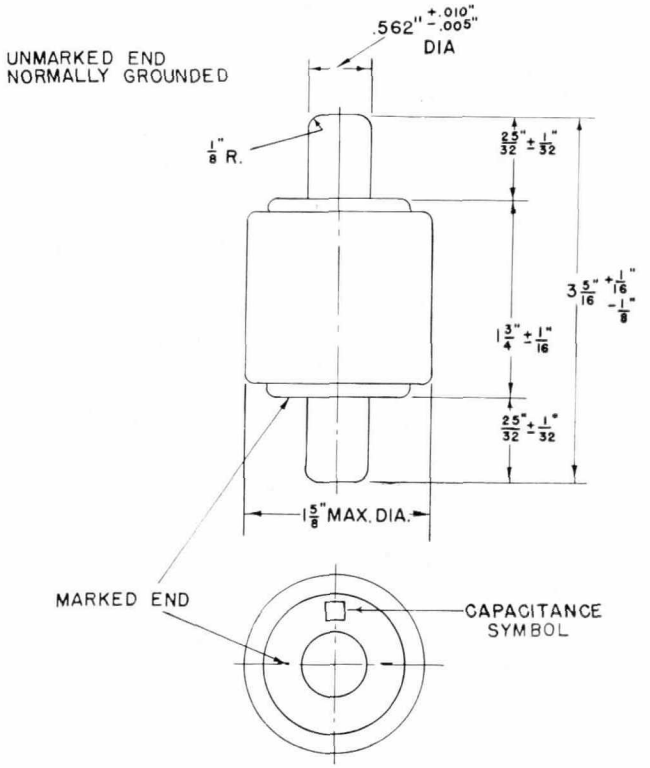

OUTLINE
GL-1L21, 1L32, 1L36, 1L38

K5964469 10-29-45

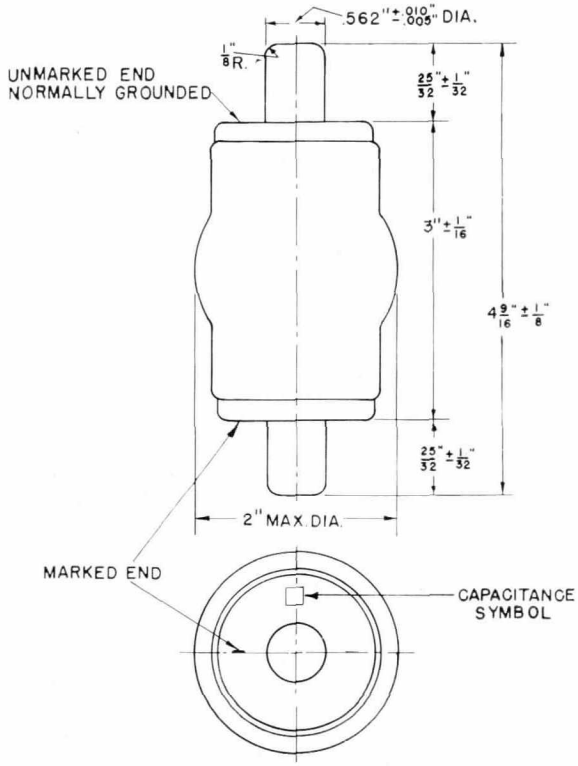

OUTLINE
GL-1L22, 1L23, 1L25, 1L31

K8639363 10-29-45

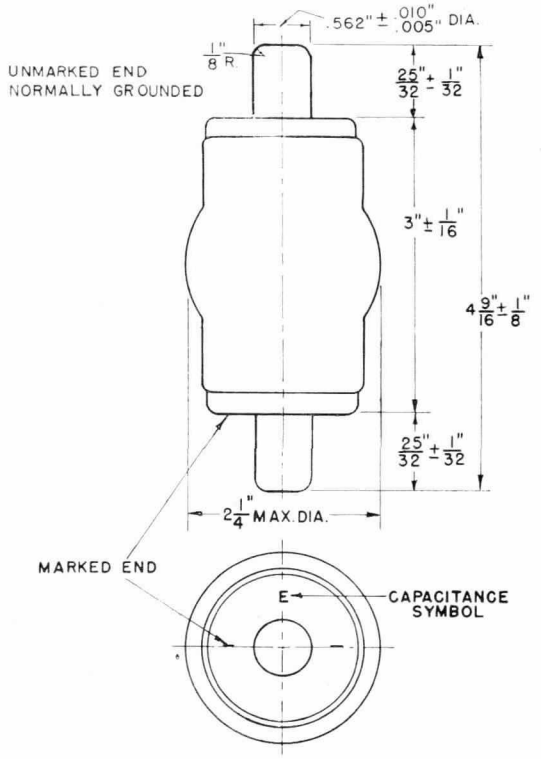

OUTLINE
GL-1L24

K-9033852 10-29-45

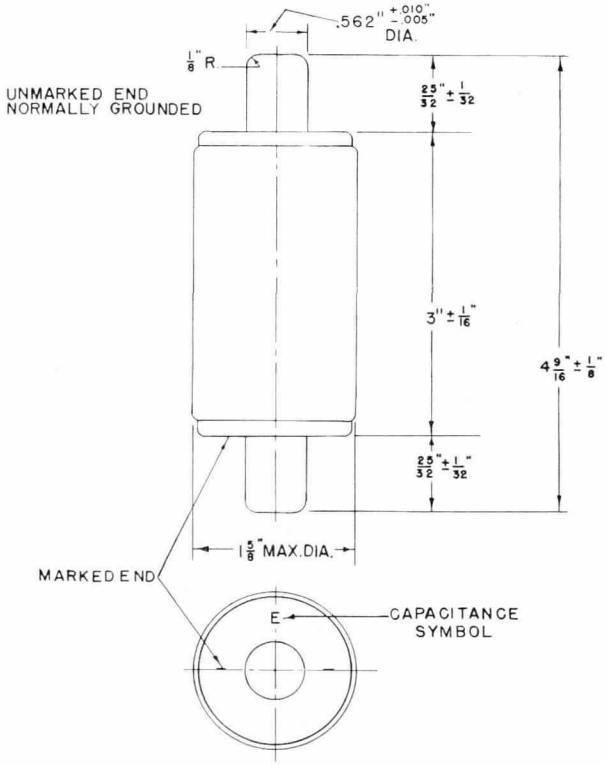

OUTLINE
GL-1L33

K-5964459 10-29-45

TUBE DEPARTMENT

GENERAL ELECTRIC

Schenectady 5, N. Y.

9-53 (20M)

PRINTED IN U.S.A.