TOSHIBA HYDROGEN THYRATRON
1G45P/3C45

Toshiba 1G45P is a hydrogen thyratorn for switching service in radar modulators and in other pulse applications.
It is capable of switching a peak power of 50 kW at an average power level of 65 watts.
This tube is interchangeable with the 3C45.

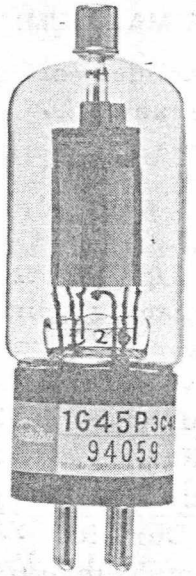

GENERAL DATA

ELECTRICAL:

	Minimum	Bogie	Maximum	
Cathode: Oxide-Coated				
Heater Voltage	5.7	6.3	6.6	V
Heater Current (Ef=6.3V)	2.0	2.25	2.50	A
Heating Time	120	-	-	sec
Anode Voltage Drop	-	60	150	V
Anode Delay Time	-	-	0.6	μs
Anode Current Time Jitter	--	0.01	0.02	μs

MECHANICAL:

Dimensions: ..... See Outline Drawing
- Overall Length ..... 122 ± 5 mm
- Max. Diameter ..... 40 mm

Base Number:
- Cap ..... A9S, Small Cap (JEDEC No. C1-1)
- Base ..... D16S-2, Medium Shell Small 4-pin (JEDEC No. A4-9)

Recommended Socket:
- Cap ..... Toshiba VT-29056
- Base ..... Toshiba VT-21025

Base Connections ..... See Outline Drawing
Cooling ..... Natural
Mounting Position ..... Any
Net Weight (Approx.) ..... 60 g

★ The information contained herein is presented only as a guide for the applications of our products. No responsibility is assumed by TOSHIBA for any infringements of patents or other rights of the third parties which may result from its use. No license is granted by implication or otherwise under any patent or patent rights of TOSHIBA or others.
★ The information contained herein may be changed without prior notice. It is therefore advisable to contact TOSHIBA before proceeding with the design of equipment incorporating this product.

No.ED-T100 1982-05-14

RATINGS

ABSOLUTE MAXIMUM:

Peak Anode Voltage:		
Inverse (1)	3000	V
Forward (2)	5% epy ∿ 3000	V
Anode Current:		
Peak Current	35	A
Average Current	0.045	A
Averaging Time	1	cycle
Minimum DC Supply Voltage	800	V
Negative Grid Voltage (Before Conduction)	200	V
Rate of Rise of Cathode Current	750	A/μs
Puse Rapetition Rate (prr)	2500	pps
Operation Factor (3)	0.3×10^9	
Pulse Duration	6	μs
Ambient Temperature	-50 ∿ +90	°C
Altitude	3000	m

GRID DRIVE (4):

Peak Grid Voltage (Min.)	130	V
Time of Rise (Max.)	0.5	μs
Grid Pulse Duration (Min.)(70.7% Amplitude)	2	μs
Grid Drive Circuit Impedance (Max.)	1500	Ω

TYPICAL OPERATION (Pulse Modulator):

DC Anode Supply Voltage	1500	V
Pulse Repetition Rate (prr)	2500	pps
Pulse Width	0.5	μs
Grid Drive Voltage	200	V
Peak Power Output	45	kW
Average Power Output	56	W

Note (1) In pulse operation, the peak inverse anode voltage exclusive of a spike of 0.05 microsecond maximum duration should not exceed 1500 volts during the first 25 microsecond after the pulse.

(2) Where the anode supply voltage is applied instantaneously, the maximum value of the anode voltage shall not reach 3000 volts in less than 0.04 microsecond.

(3) prr(pulse repetition rate. pps)$\times_{epy}$ (peak forward anode voltage. V)$\times_{ib}$(peak anode current. A)

(4) Measurements are at the tube socket with the thyratron grid disconnected.

GENERAL OPERATIONAL RECOMMENDATION

1. High Voltage

Operating voltages for power tubes range from several hundred volts to higher than 50,000 volts. Since these voltage can be deadly, equipment must be designed so that one can not come in contact with high voltage.

2. High Temperature

Don't come in contact with the vacuum tubes, not only the period of the operation but also immediately after the removal of all tube voltages, because the temperature of the tube during the operation often exceeds 200 °C.

DIMENSIONAL OUTLINE

1G45P/3C45

Unit : mm

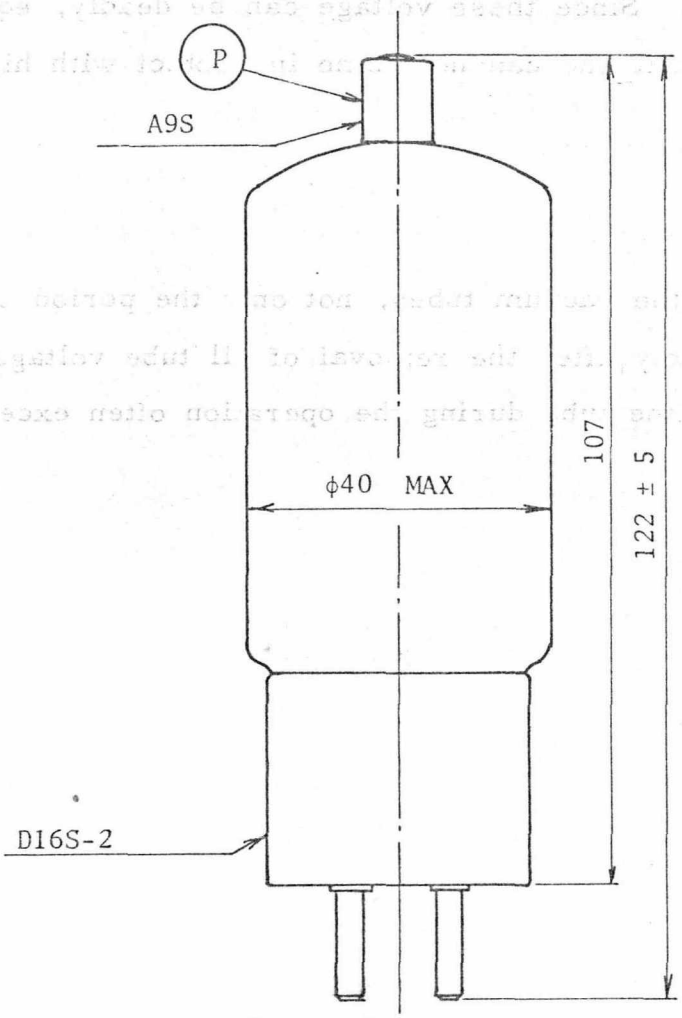

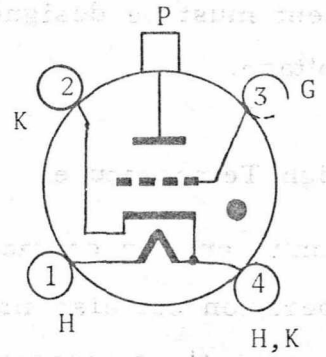

P: Anode

G: Grid

K: Cathode
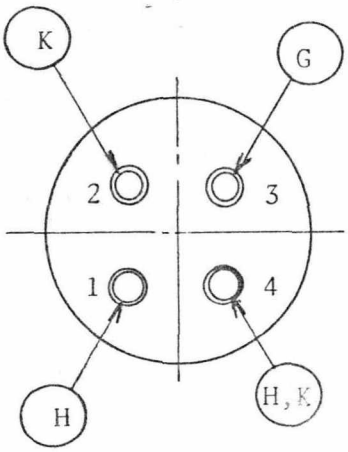
H: Heater