SECURITY CLASSIFICATION Confidential

Type 1B26

Tunable TR Tube

GENERAL CHARACTERISTICS

Electrical

Max. Ignitor Ignition Time	5 Seconds
Max. Insertion Loss	1.75 Decibels
Frequency Tuning Range	23630 - 24580 MC
Ignitor Voltage Drop for 100 Microamperes	235 - 450 Volts
Max. Peak Leakage Power	25 Milliwatts
Recovery Time - Loss of signal in the tube 4 microseconds following the pulse shall be not more than 3 db in excess of the loss 100 microseconds following the pulse.	
Ignitor Interaction, Max.	0.2 db

Mechanical

Ionizatable Medium	Gas
Number of Electrodes	*2
Dimensions	See Outline
Mounting Position	Any

MAXIMUM RATINGS

Ignitor Open Circuit Voltage, DC	-750 to -1000 Volts
Ignitor Current	100 to 200 Microamps.
Ambient Temperature Range	-50°C to +100°C

* The two points at the center of the tube constitute an r-f gap, while the ignitor (at extreme end of reservoir and negative) and body constitute a dc gap used to produce ionization to help trigger the r-f gap.

Bloomfield, New Jersey December 5, 1945

from RMA release # 470, Feb. 11, 1946

IB26

SECURITY CLASSIFICATION-CONFIDENTIAL

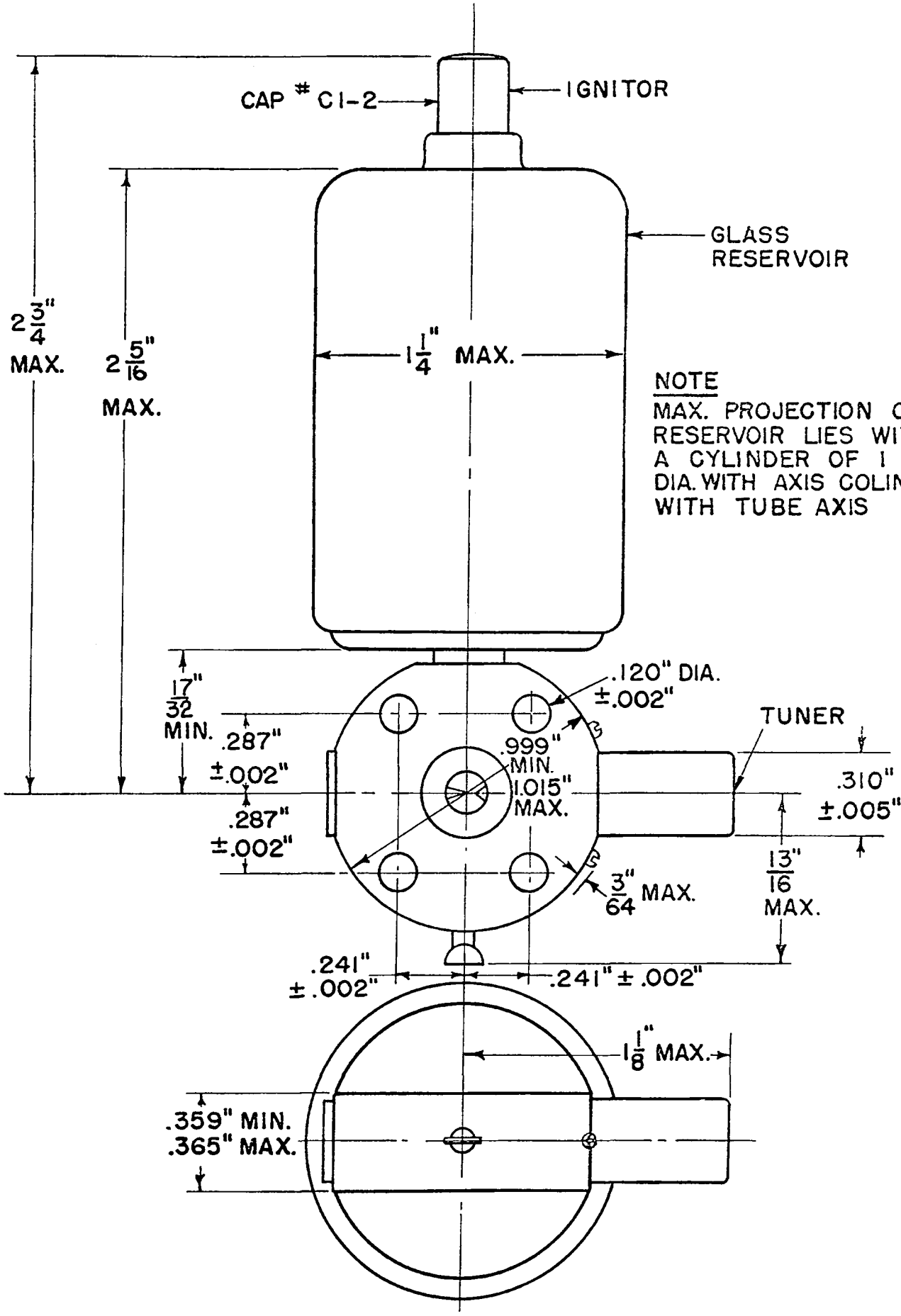

12-5-45