TECHNICAL INFORMATION

WESTERN ELECTRIC 1B22 VACUUM TUBE

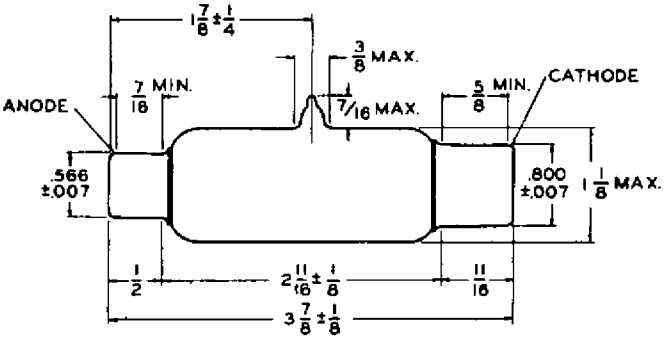

THE TERMINALS OF THE COMPLETED TUBE SHALL BE CAPABLE OF BEING INSERTED SIMULTANEOUSLY INTO TWO COAXIAL CYLINDERS, THE CYLINDER FOR THE LARGE TERMINAL BEING .820 DIA. × 5/8 LONG AND THE CYLINDER FOR THE SMALL TERMINAL BEING .580 DIA. × 7/16 LONG.

FIG. 1

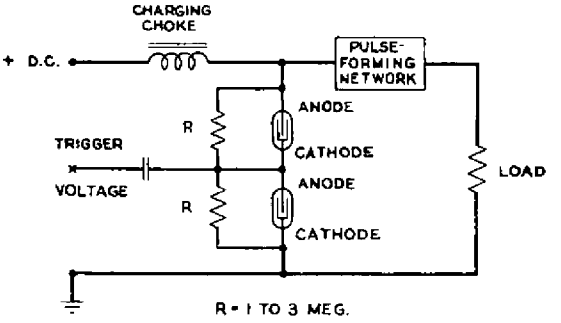

FIG. 2

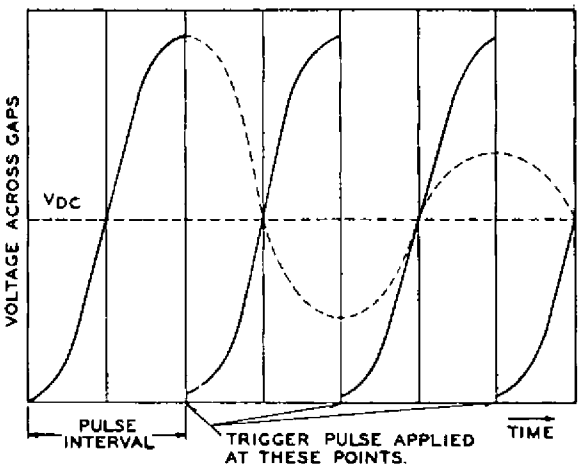

FIG. 3

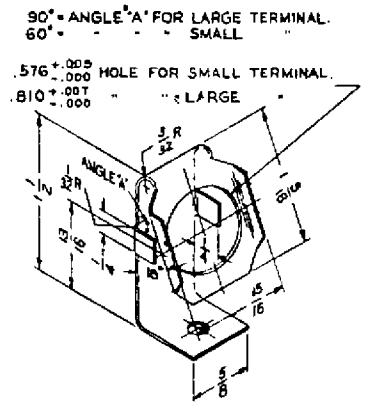

MATERIAL.
#25 B&S GA. (.018) PHOSPHOR-BRONZE SPRING TEMPER.

FIG. 4

CLASSIFICATION

The 1B22 vacuum tube is a hydrogen argon filled spark gap modulator tube. It is best suited for operation as a triggered gap in circuits similar to the one shown in Fig. 2. Two 1B22 tubes constitute the minimum number that can be operated as a triggered gap. More tubes in series may be used for higher voltages.

MOUNTING

The mounting should be such that the tube when inserted will not be subject to excessive mechanical shock which would result in breakage of the glass bulb. Brackets of the type shown in Fig. 4 have been found to be satisfactory. The use of ordinary spring type fuse clips is not recommended.

The tube may be mounted in any position.

A free circulation of air around the bulb should be provided to assure proper cooling.

OPERATION AND CHARACTERISTICS

The characteristics of this tube are such that it will stand off voltages as high as 2700 volts and after having been broken down by a trigger pulse of the proper shape and amplitude will conduct currents of the order of 100 amperes for short intervals of time at a nominal repetition rate of 1000 pps.

The trigger pulse may take a number of different forms but a convenient and easily obtained type of pulse is a damped oscillation with a relatively high decrement. The fundamental frequency of such an oscillation may vary over a range of .1 to .5 megacycle. The form of the trigger pulse should be such that the logarithmic decrement lies between .3 and .7. If the maximum amplitude of the trigger pulse is 5 kv or more there is a possibility of ionizing both gaps thereby making lower starting voltages possible. If a unidirectional trigger pulse is used the starting voltages required are in general higher than in the case of the oscillatory type of pulse.

When the nominal trigger pulse is applied to the tubes in a circuit such as the one shown in Fig. 2 and the d-c voltage is raised continuously from zero the tubes will begin to operate when the d-c voltage reaches a maximum value of 2.5 kv. This is called the starting voltage. Conversely if the d-c voltage is set at 2.5 kv and the trigger amplitude is raised continuously from zero a normal pair of tubes will begin operation when or before the maximum trigger amplitude has reached 5000 volts. Hence it is necessary that the d-c power supply have regulation such that the no-load voltage applied to the tubes is at least 2.5 kv. This will assure that in the case of interruption of the trigger voltage, supply voltage or both, the tube will start upon return to normal conditions.

The circuit shown in Fig. 2 contains a resonance charging feature in that when the circuit is operating under proper conditions the peak voltage across the switching tubes is about twice the d-c supply voltage. If the resonant frequency of the charging choke and the network capacitance in series is 1/2 the pulsing frequency, switching will take place at the peak of the first oscillation as shown in Fig. 3, the

NOTE: This tube is obsolete and manufacturing facilities are no longer available.

voltage across the gaps dropping to approximately 150 volts as the network energy is discharged into the load. The dashed curve shows the excursion of the voltage across the gaps if triggering should not take place. If the pulse forming network is matched to the load impedance only half the network voltage will appear across the load in the case of a square pulse. Hence with the doubling feature a voltage which approaches the d-c supply voltage appears at the load. In practical circuits the ratio of peak voltage across the load to d-c supply voltage may vary from .7 to .95.

Reverse current through the tubes arising from mismatch in the circuits or from other causes should be avoided since it will appreciably shorten tube life.

In some applications it may be required that several different repetition rates be used. In such case the resonant circuit may be designed for the highest required repetition rate and a charging diode inserted between the charging choke and the network. The diode permits the voltage to rise to its maximum value but prevents the normal drop in voltage which would occur if switching did not take place at the peak of the voltage wave. Hence any value of repetition rate lower than the resonance value may be used. It should be noted, however, that a very low value of total resistance in the dividing network across the spark gap tubes will cause the voltage to drop off with time despite the action of the diode, thus limiting the practical range and repetition rate.

The diode must have sufficient emission to pass the required charging current. Its plate to cathode impedance should be low because the drop in the diode must be compensated for by an increase in the voltage of the power supply. It and its filament or heater supply must have sufficient insulation to withstand the required peak and inverse voltages. The maximum peak inverse voltage to which the diode will be subjected is approximately the no load voltage of the d-c power supply.

In designing resonance charging circuits for use with spark gap tubes care should be taken to assure that the no-load d-c voltage does not exceed a value which will cause arcing after the first pulse. Since the second pulse will be doubled and since, in general, the condenser of the power supply filter will not yet have had time to discharge to its full load voltage the pulses immediately succeeding the first may be in excess of the maximum peak voltage rating of the gaps, thus causing circuit failure. This imposes a limitation on the capacitance of the final condenser in the power supply filter.

If the circuit is operating under normal conditions and the d-c supply voltage is raised, a point will be reached at which both gaps will pass over to a continuous arc. The maximum peak voltage above which this will occur is approximately 2.7 kv per gap.

In order to prevent damage to tubes or circuits if arcing occurs an overload relay in the d-c supply lead should be provided. This relay should be set to trip at about 100 milliamperes d-c and should remove the high voltage d-c when operated.

If under normal operating conditions the d-c supply voltage is lowered it will reach a value at which intermittent action will take place. Further reduction of the d-c voltage will cause cessation of operation. The point below which intermittent action takes place is called the minimum peak voltage. Its maximum value is 3.8 kv for any number of gaps in series provided rated trigger voltage is available at the spark gap tubes. This is true because with n gaps in series, n-1 gaps are broken down when the recommended trigger voltage is applied from the required circuit. Hence in any case only one gap remains to be broken down by the voltage on the pulse forming network.

The range of voltage between the minimum peak voltage and the maximum peak voltage is called the operating range. This is the range over which the spark gap tubes will operate satisfactorily provided circuit requirements are satisfied.

The two tube circuit shown in Fig. 2 will stand off approximately 5 kv. If it is desired to use higher voltages more spark gap tubes may be added in series.

It should be noted that when the number of gaps in series is increased the operating range is increased because while the maximum peak voltage is raised the minimum peak voltage remains the same as noted above. This is true only if the voltage is divided equally among the tubes and if sufficient peak trigger voltage is supplied to the junction points between spark gap tubes through individual coupling condensers.

In the interval between pulses when the network capacitance is being charged the trigger coupling condensers are also being charged through the resistors in the voltage dividing network. The charging currents to these condensers must flow through the resistors of the dividing network and unless the time constants of coupling condensers and dividing resistors are small as compared to the pulse interval the voltages appearing across the spark gap tubes will not be equal. This will result in the reduction of the upper limit of the range from its maximum value.

The circuit elements necessary for division of voltage during charging and for supply of trigger voltage to the junction points of the spark gap tubes cause loading of the trigger circuit. Since the trigger circuit is, in general, a high impedance this loading increases the difficulty of obtaining sufficient trigger voltage at the spark gap terminals. For this reason and due to the difficulty of obtaining voltage division at various pulse rates the use of more than four gaps in series is not recommended.

CHARACTERISTICS

*Max. peak voltage per gap at 1100 pps	2700 volts
Min. peak voltage for any number of gaps	3800 volts
Max. starting voltage (In 2 tube cct. with 5 kv peak trigger voltage)	2500 volts d-c
**Peak trigger voltage	5000 volts
Nominal interelectrode capacitance	2.0 μμf

RATINGS

***Max. peak current	75 amperes
Max. average current	75 milliamperes
*Range of repetition rate	300-1600 pps
***Max. pulse duration	2.5 μsec
Range of fundamental trigger frequency	0.1-0.5 mc

*When the pulse rate is increased from 1100 pps to 1600 pps the max. peak voltage must be reduced to 2500 volts.

**This is the trigger voltage at the tube terminals (without the spark gap tubes inserted) necessary for reliable operation. Reduction of peak trigger voltage will curtail range and increase starting voltage.

*** Tube life decreases as peak current or pulse length increases. Some sacrifice in tube life must be anticipated when maximum rated peak current and pulse duration are simultaneously applied.