# CHARACTERISTICS

## GENERAL DATA

| | |
|---|---|
| Focusing Method | Electrostatic |
| Deflection Method | Magnetic |
| Deflection Angles (Approx.) | |
| Horizontal | 101 Degrees |
| Diagonal | 114 Degrees |
| Vertical | 86 Degrees |
| Phosphor | Aluminized P4 |
| Fluorescence | White |
| Persistence | Short to Medium |
| Faceplate | Gray Filter Glass |
| Light Transmittance (Approx.) | 78 Percent |

## ELECTRICAL DATA

| | 19AYP4 19AXP4 | 19XP4 19AVP4 | |
|---|---|---|---|
| Heater Voltage | 6.3 | 6.3 | Volts |
| Heater Current ± 5% | 0.45 | 0.60 | Ampere |
| Heater Warm-up Time[1] | 11 | 11 | Seconds |
| Direct Interelectrode Capacitances (Approx.) | | | |
| Cathode to All Other Electrodes | | 5 | μμf |
| Grid No. 1 to All Other Electrodes | | 6 | μμf |
| External Conductive Coating to Anode[2] | | 1500 | μμf Max. |
| | | 1000 | μμf Min. |

## MECHANICAL DATA

| | |
|---|---|
| Minimum Useful Screen Dimensions (Maximum Assured) | |
| Height | 12 Inches |
| Width | 15⅛ Inches |
| Diagonal | 17 9/16 Inches |
| Minimum Useful Screen Area | 172 Sq. Inches |
| Neck Length | 4⅛ ± ⅛ Inches |
| Overall Length | 11⅜ ± ¼ Inches |
| Bulb | J149A |
| Bulb Contact (Recessed Small Cavity Cap) | J1-21 |
| Base | B7-208 |
| Basing | 8HR |
| Weight (Approx.) | 13½ Pounds |

# RATINGS

## MAXIMUM RATINGS (Design Maximum Values)

| Grid Drive Service[3] | 19AYP4 19AVP4 | 19AXP4 | 19XP4 | | |
|---|---|---|---|---|---|
| Maximum Anode Voltage | 23,000 | 20,000 | 20,000 | Volts | dc |
| Minimum Anode Voltage | 15,000 | 10,000 | 11,000 | Volts | dc |
| Grid No. 4 Voltage (Focusing Electrode) | | | −550 to +1100 | Volts | dc |
| Maximum Grid No. 2 Voltage | | | 550 | Volts | dc |
| Minimum Grid No. 2 Voltage | | | 200 | Volts | dc |
| Grid No. 1 Voltage | | | | | |
| Negative Bias Value | | | 154 | Volts | dc |
| Negative Peak Value | | | 220 | Volts | |
| Positive Bias Value | | | 0 | Volts | dc |
| Positive Peak Value | | | 2 | Volts | |
| Peak Heater-Cathode Voltage | | | | | |
| Heater Negative with Respect to Cathode During Warm-up Period not to Exceed 15 Seconds | | | 450 | Volts | |
| After Equipment Warm-up Period | | | 200 | Volts | |
| Heater Positive with Respect to Cathode | | | 200 | Volts | |

## QUICK REFERENCE DATA

Television Picture Tube
19″ Direct Viewed
Rectangular Glass Type
Spherical Faceplate
Gray Filter Glass
Aluminized Screen
Electrostatic Focus
114° Magnetic Deflection
1 ⅛″ Neck Diameter
No Ion Trap
External Conductive Coating

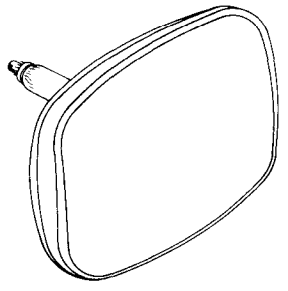

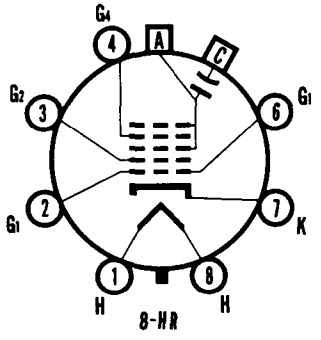


SYLVANIA
ELECTRONIC TUBES
A Division of
Sylvania Electric Products Inc.
PICTURE TUBE OPERATIONS
SENECA FALLS, NEW YORK
*Prepared and Released By The*
*TECHNICAL PUBLICATIONS SECTION*
*EMPORIUM, PENNSYLVANIA*
OCTOBER, 1961

*File Under*
TELEVISION PICTURE TUBES

## MAXIMUM RATINGS (Design Maximum Values) Con't.

| Cathode Drive Service[4] | 19AYP4 19AVP4 | 19AXP4 | 19XP4 | | |
|---|---|---|---|---|---|
| Maximum Anode Voltage | 23,000 | 20,000 | 20,000 | Volts | dc |
| Minimum Anode Voltage | 15,000 | 10,000 | 11,000 | Volts | dc |
| Grid No. 4 Voltage (Focusing Electrode) | | | –400 to +1250 | Volts | dc |
| Maximum Grid No. 2 Voltage | | | 700 | Volts | dc |
| Minimum Grid No. 2 Voltage | | | 350 | Volts | dc |
| Cathode Voltage | | | | | |
| Positive Bias Value | | | 154 | Volts | dc |
| Positive Peak Value | | | 220 | Volts | |
| Negative Bias Value | | | 0 | Volts | dc |
| Negative Peak Value | | | 2 | Volts | |
| Peak Heater-Cathode Voltage | | | | | |
| Heater Negative with Respect to Cathode | | | | | |
| During Warm-up Period not to Exceed 15 Seconds | | | 450 | Volts | |
| After Equipment Warm-up Period | | | 200 | Volts | |
| Heater Positive with Respect to Cathode | | | 200 | Volts | |

## TYPICAL OPERATING CONDITIONS

| Grid Drive Service[3] | 19AYP4 19AVP4 | 19AXP4 19XP4 | | |
|---|---|---|---|---|
| Anode Voltage | 20,000 | 16,000 | Volts | dc |
| Grid No. 4 Voltage for Focus | | 0 to 400 | Volts | dc |
| Grid No. 2 Voltage | | 400 | Volts | dc |
| Grid No. 1 Voltage Required for Cutoff[5] | | –46 to –94 | Volts | dc |

| Cathode Drive Service[4] | 19AYP4 19AVP4 | 19AXP4 19XP4 | | |
|---|---|---|---|---|
| Anode Voltage | 20,000 | 16,000 | Volts | dc |
| Grid No. 4 Voltage for Focus | | 0 to 400 | Volts | dc |
| Grid No. 2 Voltage | | 400 | Volts | dc |
| Cathode Voltage Required for Cutoff[5] | | 42 to 78 | Volts | dc |

## CIRCUIT VALUES

| | |
|---|---|
| Grid No. 1 Circuit Resistance | 1.5 Megohms Max. |

## NOTES:

1. *Heater warm-up time is defined as the time required for the voltage across the heater to reach 80% of the rated heater voltage after applying four (4) times rated heater voltage to a circuit consisting of the tube heater in series with a resistance equal to three (3) times the rated heater voltage divided by the rated heater current.*
2. *External conductive coating must be grounded.*
3. *Voltages are positive with respect to cathode unless indicated otherwise.*
4. *Voltages are positive with respect to Grid No. 1 unless indicated otherwise.*
5. *Visual extinction of focused raster. For cutoff of the undeflected focused spot, the absolute value of the bias between cathode and grid will increase by about 5 volts.*

## WARNING:

*X-ray radiation shielding may be necessary to protect against possible danger of personal injury from prolonged exposure at close range if this tube is operated at higher than the manufacturer's Maximum Rated Anode Voltage or 16,000 volts, whichever is less.*

## OUTLINE

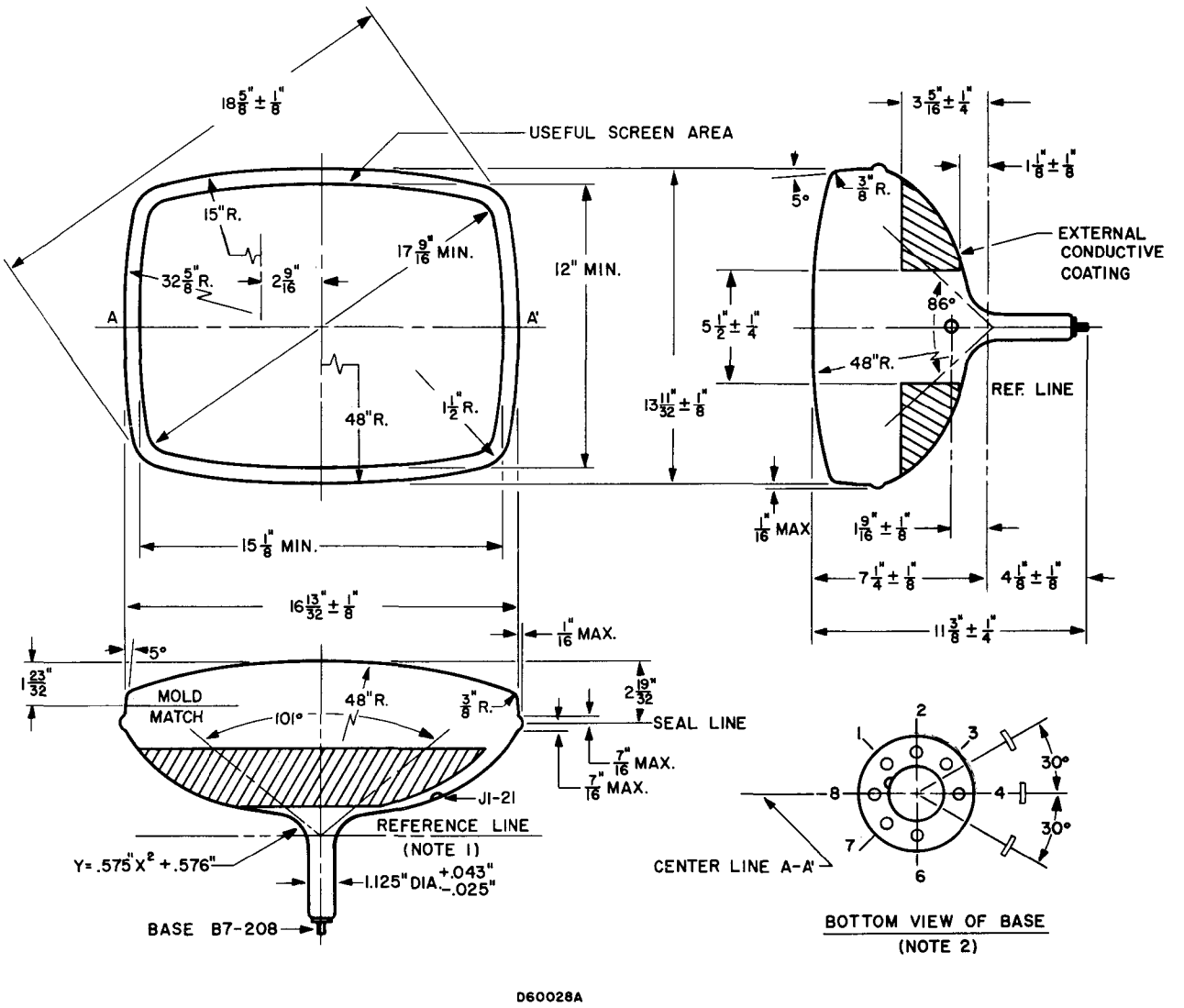


## DIAGRAM NOTES:

1. *Reference Line is determined by plane C-C' of JEDEC No. 126 Reference Line Gauge, when the gauge is seated against the bulb.*
2. *Base Pin No. 4 aligns with horizontal centerline (A-A') within 30° and is on same side as anode contact, J1-21.*