CHARACTERISTICS

GENERAL DATA

Focusing Method	Electrostatic
Deflection Method	Magnetic
Deflection Angles (Approx.)	
Horizontal	101 Degrees
Diagonal	114 Degrees
Vertical	86 Degrees
Phosphor	Aluminized P4
Fluorescence	White
Persistence	Short to Medium
Faceplate	Gray Filter Glass
Light Transmittance (Approx.)	78 Percent

ELECTRICAL DATA

	19AYP4 19AXP4	19XP4 19AVP4	
Heater Voltage	6.3	6.3	Volts
Heater Current ± 5%	0.45	0.60	Ampere
Heater Warm-up Time[1]	11	11	Seconds
Direct Interelectrode Capacitances (Approx.)			
Cathode to All Other Electrodes		5	μμf
Grid No. 1 to All Other Electrodes		6	μμf
External Conductive Coating to Anode[2]		1500	μμf Max.
		1000	μμf Min.

MECHANICAL DATA

Minimum Useful Screen Dimensions (Maximum Assured)		
Height	12	Inches
Width	15⅛	Inches
Diagonal	17 9/16	Inches
Minimum Useful Screen Area	172	Sq. Inches
Neck Length	4⅛ ± ⅛	Inches
Overall Length	11⅜ ± ¼	Inches
Bulb	J149A	
Bulb Contact (Recessed Small Cavity Cap)	J1-21	
Base	B7-208	
Basing	8HR	
Weight (Approx.)	13½	Pounds

RATINGS

MAXIMUM RATINGS (Design Maximum Values)

Grid Drive Service[3]	19AYP4 19AVP4	19AXP4	19XP4		
Maximum Anode Voltage	23,000	20,000	20,000	Volts	dc
Minimum Anode Voltage	15,000	10,000	11,000	Volts	dc
Grid No. 4 Voltage (Focusing Electrode)			−550 to +1100	Volts	dc
Maximum Grid No. 2 Voltage			550	Volts	dc
Minimum Grid No. 2 Voltage			200	Volts	dc
Grid No. 1 Voltage					
Negative Bias Value			154	Volts	dc
Negative Peak Value			220	Volts	
Positive Bias Value			0	Volts	dc
Positive Peak Value			2	Volts	
Peak Heater-Cathode Voltage					
Heater Negative with Respect to Cathode					
During Warm-up Period not to Exceed 15 Seconds			450	Volts	
After Equipment Warm-up Period			200	Volts	
Heater Positive with Respect to Cathode			200	Volts	

QUICK REFERENCE DATA

Television Picture Tube
19" Direct Viewed
Rectangular Glass Type
Spherical Faceplate
Gray Filter Glass
Aluminized Screen
Electrostatic Focus
114° Magnetic Deflection
1 ⅛" Neck Diameter
No Ion Trap
External Conductive Coating

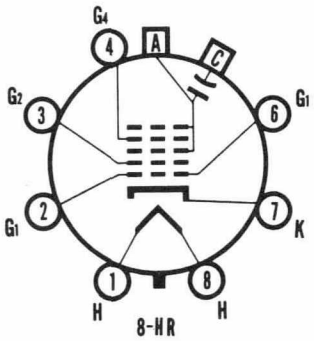

SYLVANIA
ELECTRONIC TUBES
A Division of
Sylvania Electric Products Inc.
PICTURE TUBE OPERATIONS
SENECA FALLS, NEW YORK
Prepared and Released By The
TECHNICAL PUBLICATIONS SECTION
EMPORIUM, PENNSYLVANIA
OCTOBER, 1961

File Under
TELEVISION PICTURE TUBES

MAXIMUM RATINGS (Design Maximum Values) Con't.

Cathode Drive Service[4]	19AYP4 19AVP4	19AXP4	19XP4		
Maximum Anode Voltage	23,000	20,000	20,000	Volts	dc
Minimum Anode Voltage	15,000	10,000	11,000	Volts	dc
Grid No. 4 Voltage (Focusing Electrode)			−400 to +1250	Volts	dc
Maximum Grid No. 2 Voltage			700	Volts	dc
Minimum Grid No. 2 Voltage			350	Volts	dc
Cathode Voltage					
Positive Bias Value			154	Volts	dc
Positive Peak Value			220	Volts	
Negative Bias Value			0	Volts	dc
Negative Peak Value			2	Volts	
Peak Heater-Cathode Voltage					
Heater Negative with Respect to Cathode					
During Warm-up Period not to Exceed 15 Seconds			450	Volts	
After Equipment Warm-up Period			200	Volts	
Heater Positive with Respect to Cathode			200	Volts	

TYPICAL OPERATING CONDITIONS

Grid Drive Service[3]	19AYP4 19AVP4	19AXP4 19XP4		
Anode Voltage	20,000	16,000	Volts	dc
Grid No. 4 Voltage for Focus		0 to 400	Volts	dc
Grid No. 2 Voltage		400	Volts	dc
Grid No. 1 Voltage Required for Cutoff[5]		−46 to −94	Volts	dc

Cathode Drive Service[4]	19AYP4 19AVP4	19AXP4 19XP4		
Anode Voltage	20,000	16,000	Volts	dc
Grid No. 4 Voltage for Focus		0 to 400	Volts	dc
Grid No. 2 Voltage		400	Volts	dc
Cathode Voltage Required for Cutoff[5]		42 to 78	Volts	dc

CIRCUIT VALUES

Grid No. 1 Circuit Resistance . . . . . 1.5 Megohms Max.

NOTES:

1. *Heater warm-up time is defined as the time required for the voltage across the heater to reach 80% of the rated heater voltage after applying four (4) times rated heater voltage to a circuit consisting of the tube heater in series with a resistance equal to three (3) times the rated heater voltage divided by the rated heater current.*
2. *External conductive coating must be grounded.*
3. *Voltages are positive with respect to cathode unless indicated otherwise.*
4. *Voltages are positive with respect to Grid No. 1 unless indicated otherwise.*
5. *Visual extinction of focused raster. For cutoff of the undeflected focused spot, the absolute value of the bias between cathode and grid will increase by about 5 volts.*

WARNING:

X-ray radiation shielding may be necessary to protect against possible danger of personal injury from prolonged exposure at close range if this tube is operated at higher than the manufacturer's Maximum Rated Anode Voltage or 16,000 volts, whichever is less.

OUTLINE

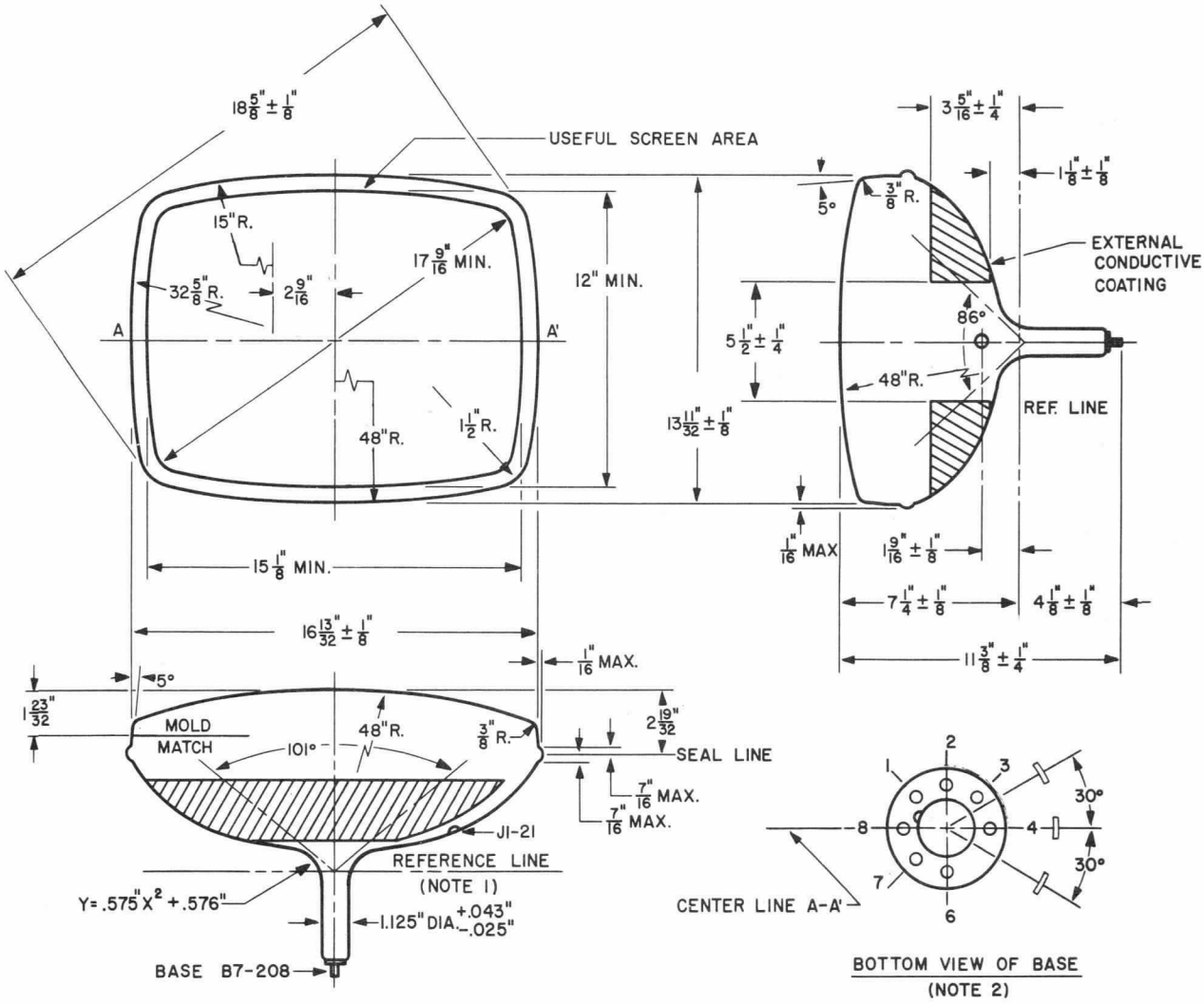

D60028A

DIAGRAM NOTES:

1. *Reference Line is determined by plane C-C' of JEDEC No. 126 Reference Line Gauge, when the gauge is seated against the bulb.*
2. *Base Pin No. 4 aligns with horizontal centerline (A-A') within 30° and is on same side as anode contact, J1-21.*