SYLVANIA engineering data service

SYLVANIA
19DKP4
19DNP4

CHARACTERISTICS

GENERAL DATA

Focusing	Electrostatic
Deflection Method	Magnetic
Deflection Angles (Approx.)	
Horizontal	101 Degrees
Diagonal	114 Degrees
Vertical	86 Degrees
Phosphor	Aluminized P4
Fluorescence	White
Persistence	Medium Short
Faceplate	Bonded Shield
(Gray Filterglass Safety Plate Laminated Directly to Face of Tube)	
Light Transmittance of Faceplate Assembly (Approx.)	
19DKP4	45 Percent
19DNP4	60 Percent

ELECTRICAL DATA

Heater Voltage	6.3 Volts	
Heater Current	0.60 ± 5 % Ampere	
Heater Warm-up Time[1]	11 Seconds	
Direct Interelectrode Capacitances (Approx.)		
Cathode to All Other Electrodes	5 pf	
Grid No. 1 to All Other Electrodes	6 pf	
External Conductive Coating to Anode[2]	1500 pf	Max.
	1000 pf	Min.

MECHANICAL DATA

Minimum Useful Screen Dimensions (Maximum Assured)	
Height	12 1/16 Inches
Width	15 1/4 Inches
Diagonal	17 5/8 Inches
Minimum Useful Screen Area	172 Sq. Inches
Neck Length	4 1/8 ± 1/8 Inches
Overall Length	11 9/16 ± 5/16 Inches
Bulb	J149C
Safety Plate	
19DKP4	FP149B2 (1/8 Inches Thick, 55 % Transmittance)
19DNP4	FP149B1 (1/8 Inches Thick, 70 % Transmittance)
Bulb Contact (Recessed Small Cavity Cap)	J1-21
Base	B7-208
Basing	8HR
Weight (Approx.)	15 1/2 Pounds

RATINGS

MAXIMUM RATINGS (Design Maximum Values)

Grid Drive Service[3]

	19DNP4	19DKP4	
Maximum Anode Voltage	18,000	23,000 Volts	dc
Minimum Anode Voltage	10,000	15,000 Volts	dc
Grid No. 4 Voltage (Focusing Electrode)		-550 to +1100 Volts	dc
Maximum Grid No. 2 Voltage		550 Volts	dc
Minimum Grid No. 2 Voltage		200 Volts	dc
Grid No. 1 Voltage			
Negative Bias Value		155 Volts	dc
Negative Peak Value		220 Volts	
Positive Bias Value		0 Volt	dc
Positive Peak Value		2 Volts	
Peak Heater-Cathode Voltage			
Heater Negative with Respect to Cathode During Warm-up Period Not to Exceed 15 Seconds		450 Volts	
After Equipment Warm-up Period		200 Volts	
Heater Positive with Respect to Cathode		200 Volts	

QUICK REFERENCE DATA

Television Picture Tube
19" Direct Viewed
Rectangular Glass Type
Bonded Shield
Gray Filter Glass
Aluminized Screen
Electrostatic Focus
114° Magnetic Deflection
1 1/8" Neck Diameter
No Ion Trap
External Conductive Coating
19DKP4—High Anode Voltage
19DNP4—Low Anode Voltage

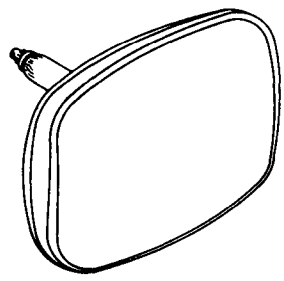

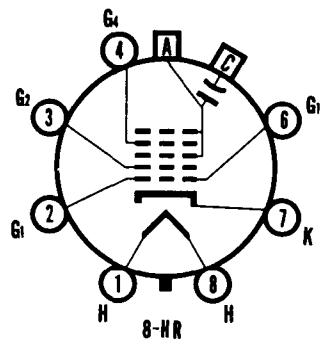

SYLVANIA ELECTRIC PRODUCTS INC.

Electronic Components Group
ELECTRONIC TUBE DIVISION
SENECA FALLS, NEW YORK

A Technical Publication
JUNE, 1965

File Under
TELEVISION PICTURE TUBES

MAXIMUM RATINGS (Design Maximum Values) Continued

Cathode Drive Service[4]

	19DNP4	19DKP4	
Maximum Anode Voltage	18,000	23,000 Volts	dc
Minimum Anode Voltage	10,000	15,000 Volts	dc
Grid No. 4 Voltage (Focusing Electrode)		−400 to +1250 Volts	dc
Maximum Grid No. 2 Voltage		700 Volts	dc
Minimum Grid No. 2 Voltage		350 Volts	dc
Cathode Voltage			
Positive Bias Value		155 Volts	dc
Positive Peak Value		220 Volts	
Negative Bias Value		0 Volt	dc
Negative Peak Value		2 Volts	
Peak Heater-Cathode Voltage			
Heater Negative with Respect to Cathode			
During Warm-up Period Not to Exceed 15 Seconds		450 Volts	
After Equipment Warm-up Period		200 Volts	
Heater Positive with Respect to Cathode		200 Volts	

TYPICAL OPERATING CONDITIONS

Grid Drive Service[3]

	19DNP4	19DKP4	
Anode Voltage	16,000	20,000 Volts	dc
Grid No. 4 Voltage for Focus	0 to 400	0 to 400 Volts	dc
Grid No. 2 Voltage	400	400 Volts	dc
Grid No. 1 Voltage Required for Cutoff[5]	40 to 76	−46 to −94 Volts	dc

Cathode Drive Service[4]

	19DNP4	19DKP4	
Anode Voltage	16,000	20,000 Volts	dc
Grid No. 4 Voltage for Focus	0 to 400	0 to 400 Volts	dc
Grid No. 2 Voltage	400	400 Volts	dc
Cathode Voltage Required for Cutoff[5]	40 to 76	42 to 78 Volts	dc

CIRCUIT VALUES

Grid No. 1 Circuit Resistance	1.5 Megohms Max.

NOTES:

1. *Heater warm-up time is defined as the time required for the voltage across the heater to reach 80 % of the rated heater voltage after applying four (4) times rated heater voltage to a circuit consisting of the tube heater in series with a resistance equal to three (3) times the rated heater voltage divided by the rated heater current.*
2. *External conductive coating must be grounded.*
3. *Voltages are positive with respect to cathode unless indicated otherwise.*
4. *Voltages are positive with respect to Grid No. 1 unless indicated otherwise.*
5. *Visual extinction of focused raster. For cutoff of the undeflected focused spot, the absolute value of the bias between cathode and grid will increase by about 5 volts.*

WARNING:

X-ray radiation shielding may be necessary to protect against possible danger of personal injury from prolonged exposure at close range if this tube is operated at higher than the manufacturer's Maximum Rated Anode Voltage or 16,000 Volts, whichever is less.

OUTLINE

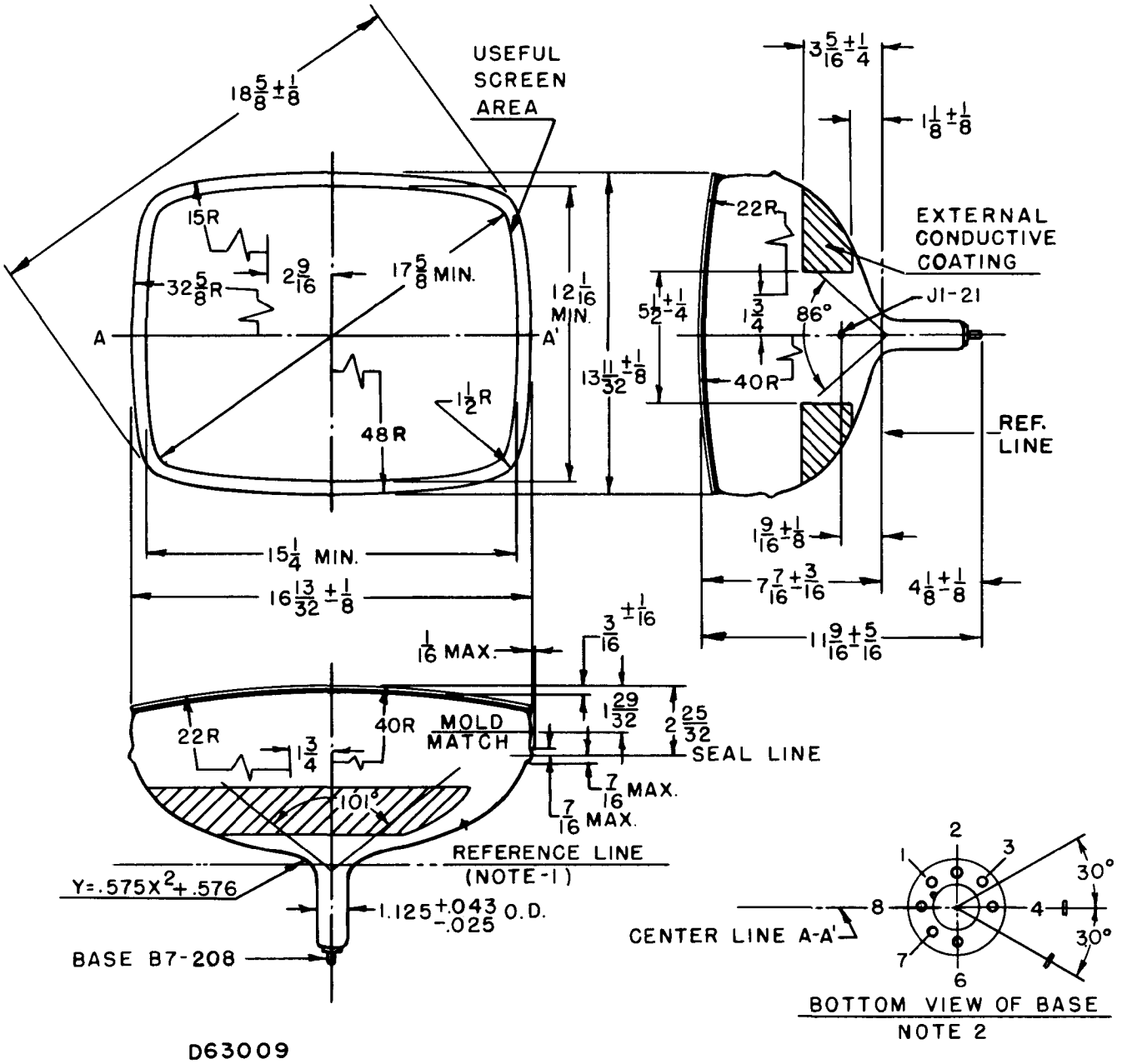

DIAGRAM NOTES:

1. *Reference Line is determined by plane C-C' of JEDEC No. 126 Reference Line Gauge when the gauge is seated against the bulb.*
2. *Base Pin No. 4 aligns with horizontal centerline (A-A') within 30° and is on same side as anode contact (J1-21).*
3. *Dimensions are in inches.*