THE Rauland CORPORATION

4245 NORTH KNOX AVE. CHICAGO 41, ILLINOIS

TELEPHONE MULBERRY 5-5000
TELETYPE CG 2790

19CLP4

DESCRIPTION

19" Direct View	Low G_2 Voltage (35V)
Rectangular Glass Envelope	Cathode Drive Design
Spherical Faceplate	92° Magnetic Deflection
Gray Filter Glass	Electrostatic Focus
Aluminized Screen	External Conductive Coating
6.3 Volt, 600 Ma Heater	No Ion Trap

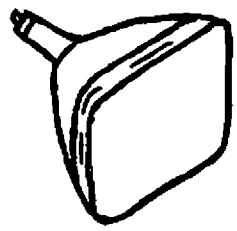

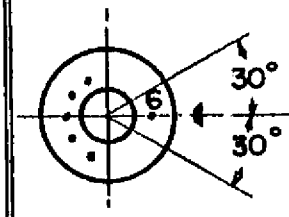

BOTTOM VIEW
BASE

ELECTRICAL DATA

Focusing Method	Electrostatic
Deflection Angles, Approximate	
Horizontal	80 Degrees
Vertical	65 Degrees
Diagonal	92 Degrees
Direct Interelectrode Capacitance	
Cathode to all other electrodes, approximate	5 uuf
Grid #1 to all other electrodes, approximate	6 uuf
External Conductive Coating to Anode	2,000 max. uuf
	1,500 min. uuf
Heater Current at 6.3 volts	600 ± 10% Ma
Heater Warm-up time	11 Seconds

OPTICAL DATA

Phosphor Number	P4 Aluminized
Light Transmittance at Center, Approximate	78 Percent

MECHANICAL DATA

Overall Length	15 1/4 ± 3/8 Inches
Greatest dimesions of tube	
Diagonal	18 5/8 ± 1/8 Inches
Width	16 13/32 ± 1/8 Inches
Height	13 11/32 ± 1/8 Inches
Minimum Useful Screen Dimensions (Projected)	
Diagonal	17 9/16 Inches
Horizontal Axis	15 1/8 Inches
Vertical Axis	12 Inches
Area	172 Sq. Inches
Neck Length	5 1/2 ±3/16 Inches
Bulb	J149B1 or equivalent
Bulb Contact	J1 - 21
Base	B6- 203
Basing	12L
Bulb Contact Alignment	
Anode Contact aligns with pin position #6	±30 Degrees

FEB., 1962

a subsidiary of Zenith Radio Corporation - Chicago

RATINGS (Design Maximum System)

Unless otherwise specified, voltages are positive and measured with respect to Grid #1

Maximum Anode Voltage	19,800 Volts
Minimum Anode Voltage	12,000 Volts
Maximum Grid #4 (Focusing Electrode)Voltage	±1100 - 500 Volts
Maximum Grid #2 Voltage	40 Volts
Minimum Grid #2 Voltage	25 Volts
Cathode Voltage	100 Volts
Maximum Heater Voltage	7 Volts
Minimum Heater Voltage	5.8 Volts
Maximum Heater-Cathode Voltage	
Heater negatives with respect to cathode	
During warm-up period not to exceed 15 seconds	-410 Volts
After equipment warm-up period	-180 Volts
Heater positive with respect to cathode	180 Volts

TYPICAL OPERATING CONDITIONS

CATHODE DRIVE SERVICE

Unless otherwise specified, all voltage values are positive with respect to Grid #1

Anode Voltage [2,3]	14,500 Volts
Grid #4 Voltage (Focusing Electrode)	250 Volts
Grid #2 Voltage[1]	35 Volts
Cathode Voltage	25 to 40 Volts

MAXIMUM CIRCUIT VALUES

Maximum Grid #1 Circuit Resistance	1.5 Megohms

NOTES

1. Visual extinction of focused raster.

2. With the combined grid #1 bias voltage and video-signal voltage adjusted to give an anode current of 150 microamperes on a 15 1/8 x 12 pattern from 2F21 Monoscope or equivalent.

3. Individual tubes will have satisfactory focus at some value between 0 and 500 Volts.

THE Rauland CORPORATION

4245 NORTH KNOX AVE. CHICAGO 41, ILLINOIS

TELEPHONE MULBERRY 5-5000
TELETYPE CG 2790

19CLP4

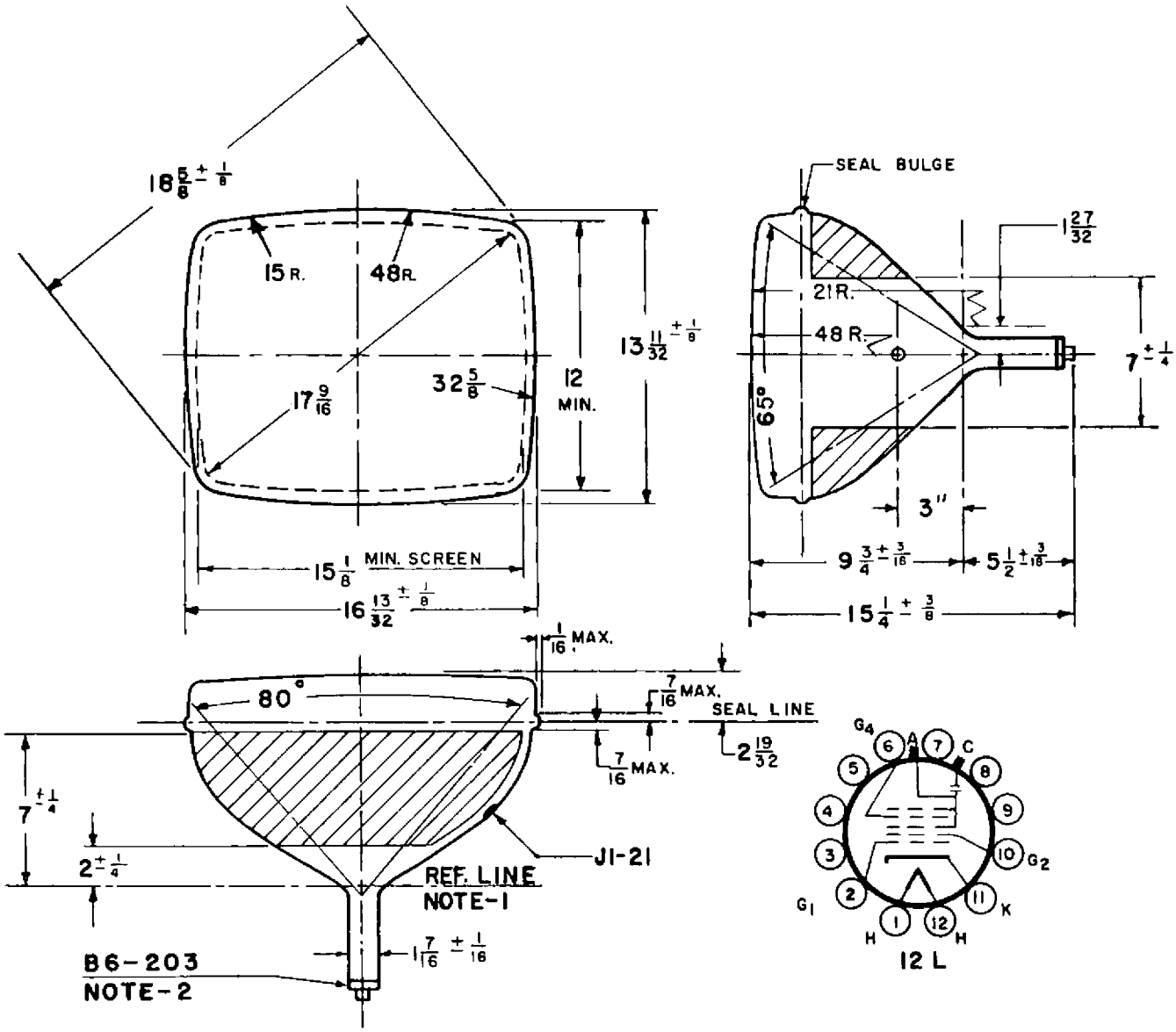

NOTE: 1. REFERENCE LINE AS DETERMNED BY PLANE C-C OF JEDEC REFERENCE LINE GAUGE 116

2. BASE PIN NO. 6 ALIGNS WITH ANODE CONTACT WITHIN 30°