19CKP4
CATHODE RAY TUBE

19 INCH, RECTANGULAR, GLASS	FACE PLATE -- SPHERICAL GRAY
FOCUS -- ELECTROSTATIC	NON ION TRAP GUN
DEFLECTION -- MAGNETIC	ALUMINIZED SCREEN
114 DEGREE DEFLECTION	EXTERNAL CONDUCTIVE COATING

LOW GRID NO. 2 VOLTAGE TYPE
FOR CATHODE-DRIVE OPERATION

DESCRIPTION AND RATING

The 19CKP4 is a 19 inch electrostatic-focus and magnetic deflection glass picture tube. Outstanding features include a short over-all length, a small neck diameter and a non ion trap gun designed for operation at a low Grid No. 2 voltage for use in cathode-drive circuits. The fluorescent screen is aluminized to increase light output and reduce undesirable screen charging. An external conductive coating is provided to serve as a filter capacitor when grounded.

ELECTRICAL DATA

Focusing Method	Electrostatic
Deflection Angle, Approximate	
Horizontal	102 degrees
Vertical	87 degrees
Diagonal	114 degrees
Direct Interelectrode Capacitance	
Cathode to all other electrodes, approximate	5 μμf
Grid #1 to all other electrodes, approximate	6 μμf
External Conductive Coating to Anode	1500 max. μμf 1000 min. μμf
Heater Current at 6.3 volts	600 ± 30 ma.
Heater Warm Up Time	11 sec.

OPTICAL DATA

Phosphor Number	P4 Aluminized
Light Transmittance at Center (Approx.)	78 Percent

CATHODE RAY TUBE DEPARTMENT
GENERAL ELECTRIC
Syracuse, N. Y.

February 14, 1962

from JEDEC release #3653, March 26, 1962

MECHANICAL DATA

Overall Length	11 3/4 ± 1/4 inches
Greatest Dimensions of Tube	
Diagonal	18 5/8 ± 1/8 inches
Width	16 13/32 ± 1/8 inches
Height	13 11/32 ± 1/8 inches
Minimum Useful Screen Dimensions (Projected)	
Diagonal	17 9/16 inches
Horizontal Axis	15 1/8 inches
Vertical Axis	12 inches
Area	172 sq. inches
Neck Length	4 1/2 ± 1/8 inches
Bulb	J149-A1
Bulb Contact	JEDEC No. J1-21
Base	JEDEC No. B7-237 or B7-208
Basing	8HR
Bulb Contact Alignment	
Anode Contact Aligns with Pin No. 4 ± 30 degrees	

RATINGS (Design Maximum System)

Unless otherwise specified, voltage values are positive and measured with respect to cathode.

Maximum Anode Voltage	22,000 volts
Minimum Anode Voltage	15,000 volts
Maximum Grid 4 (Focusing Electrode) voltage	-500 to +1000 volts
Minimum Grid 2 Voltage	40 volts
Maximum Grid 2 Voltage	100 volts
Grid 1 Voltage	
Maximum Negative Value	140 volts DC
Maximum Negative Peak Value	200 volts
Maximum Positive Value	0 volts DC
Maximum Positive Peak Value	2 volts
Maximum Heater Voltage	6.9 volts
Minimum Heater Voltage	5.7 volts
Maximum Heater-Cathode Voltage	
Heater negative with respect to cathode	
During warm-up period not to exceed 15 sec.	410 volts
After equipment warm-up period	300 volts
Heater positive with respect to cathode	180 volts

TYPICAL OPERATING CONDITIONS (Cathode Drive Service)

Anode Voltage	18,000 volts DC
Grid #4 Voltage (Focusing Electrode, Notes 2 & 3)	250 volts DC
Grid #2 Voltage	50 volts DC
Cathode to Grid #1 Voltage (Note 1)	31 to 49 volts DC

MAXIMUM CIRCUIT VALUES

Maximum Grid #1 Circuit Resistance.	1.5 max. megohm
Grid #2 Circuit Resistance	0.1 min. megohm
Focusing Electrode Circuit Resistance	0.1 min. megohm

Protective resistance in Grid No. 2 and focusing electrical circuits is advisable to prevent damage to tube. If applicable, one resistor common to both circuits may be used.

NOTES:

1. Visual extinction of focused raster.

2. With the combined Grid #1 bias voltage and video-signal voltage adjusted to give an anode current of 150 microamperes on a 15 1/8 x 11 15/16" pattern from RCA 2F21 monoscope or equivalent.

3. Individual tubes will have satisfactory focus at some value between 0 and 500 volts.

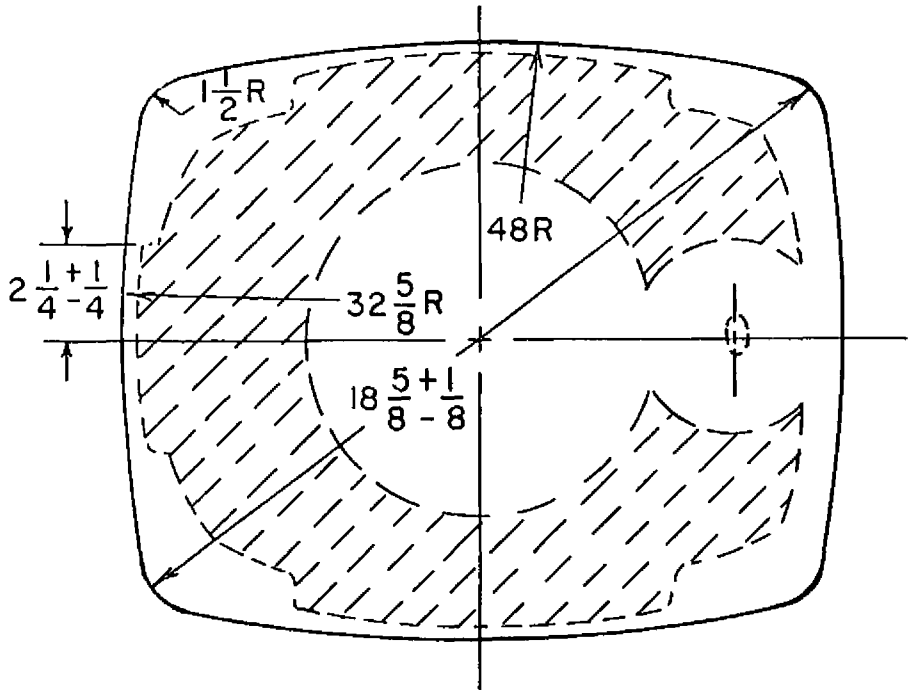

19CKP4

SCREEN DIMENSIONS

DIAGONAL — 17 9/16

WIDTH — 15 1/8

HEIGHT — 12

AREA — 172 SQ. IN.

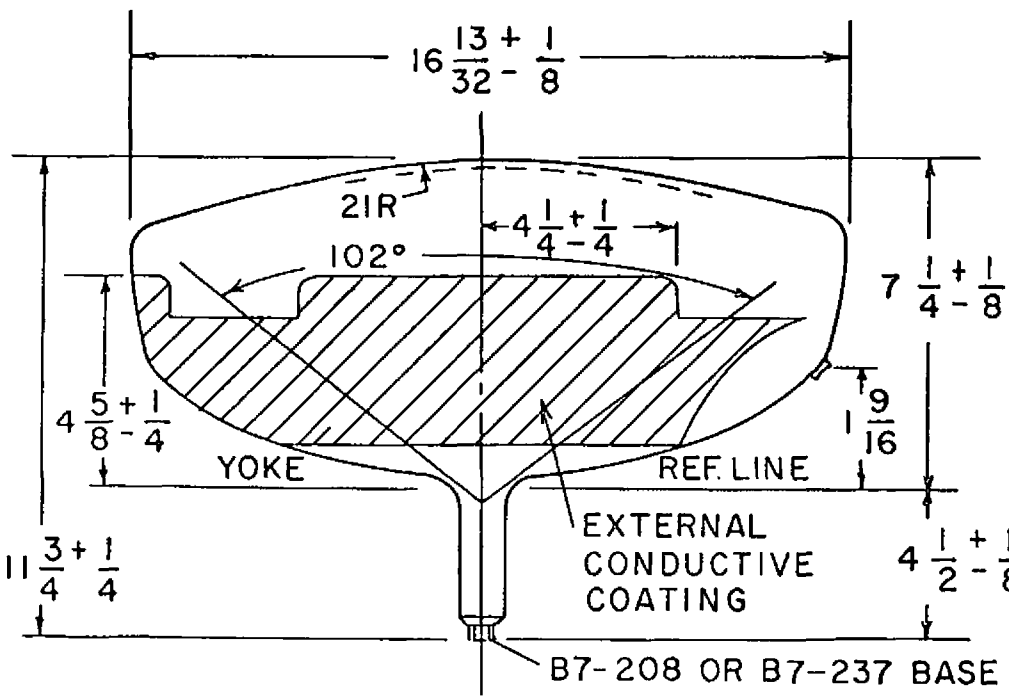

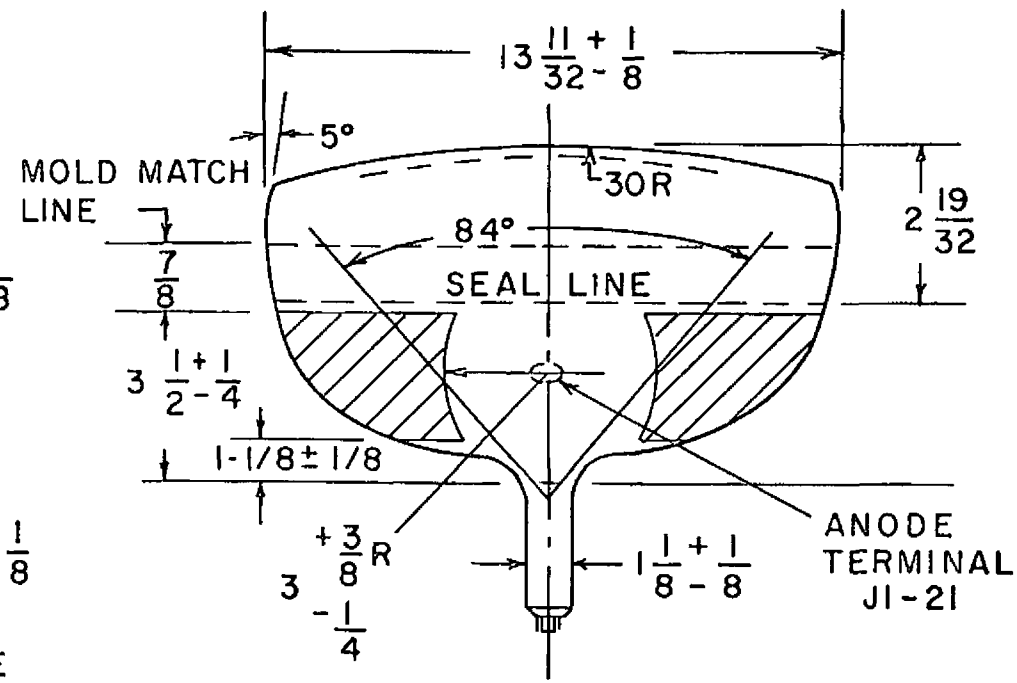

Diagram Notes

1. The reference line is determined by the intersection of the plane C-C of gage (EIA No. 126) with the glass funnel.

2. Deflection angle on the diagonal is 114°.

3. Anode terminal aligns with pin No. 4 ± 30 degrees.

4. Use a non-rigidly mounted socket with flexible leads. Bottom circumference of base wafer will fall within 1-3/4 inch diameter circle concentric with the bulb axis.

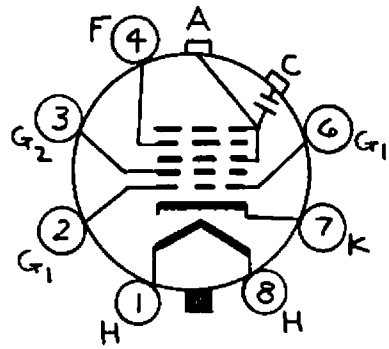

BASING DIAGRAM
8HR